EuroRack - Midi IO - Board

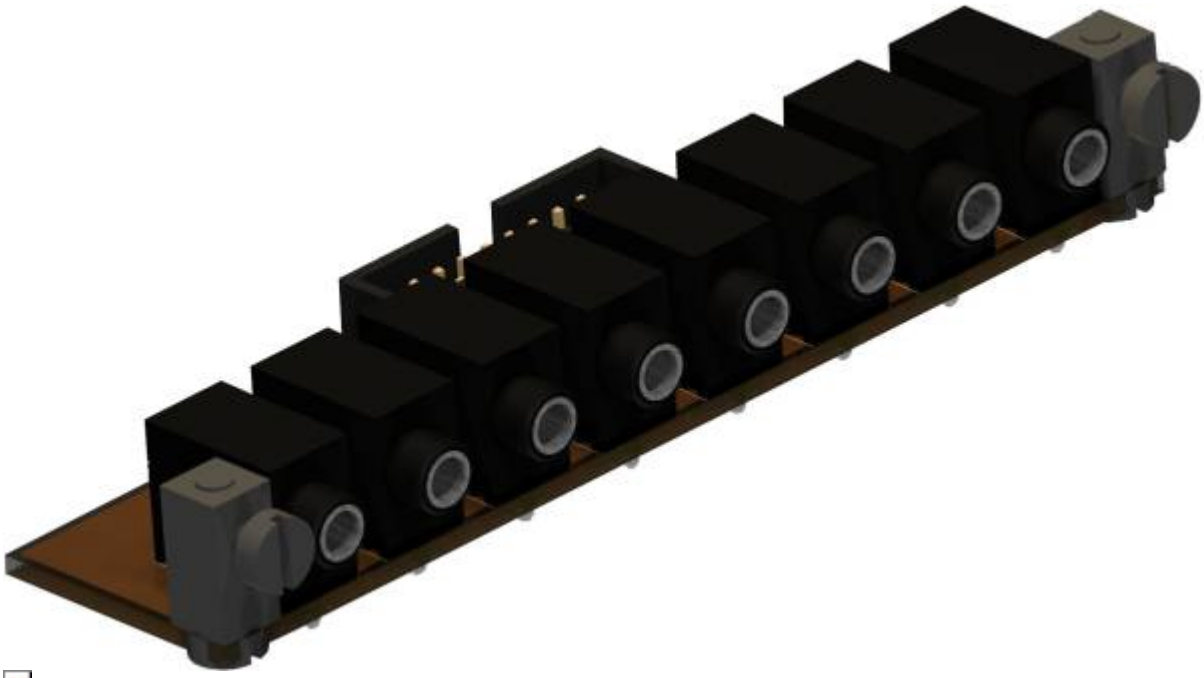

PCB Size is 100x40mm

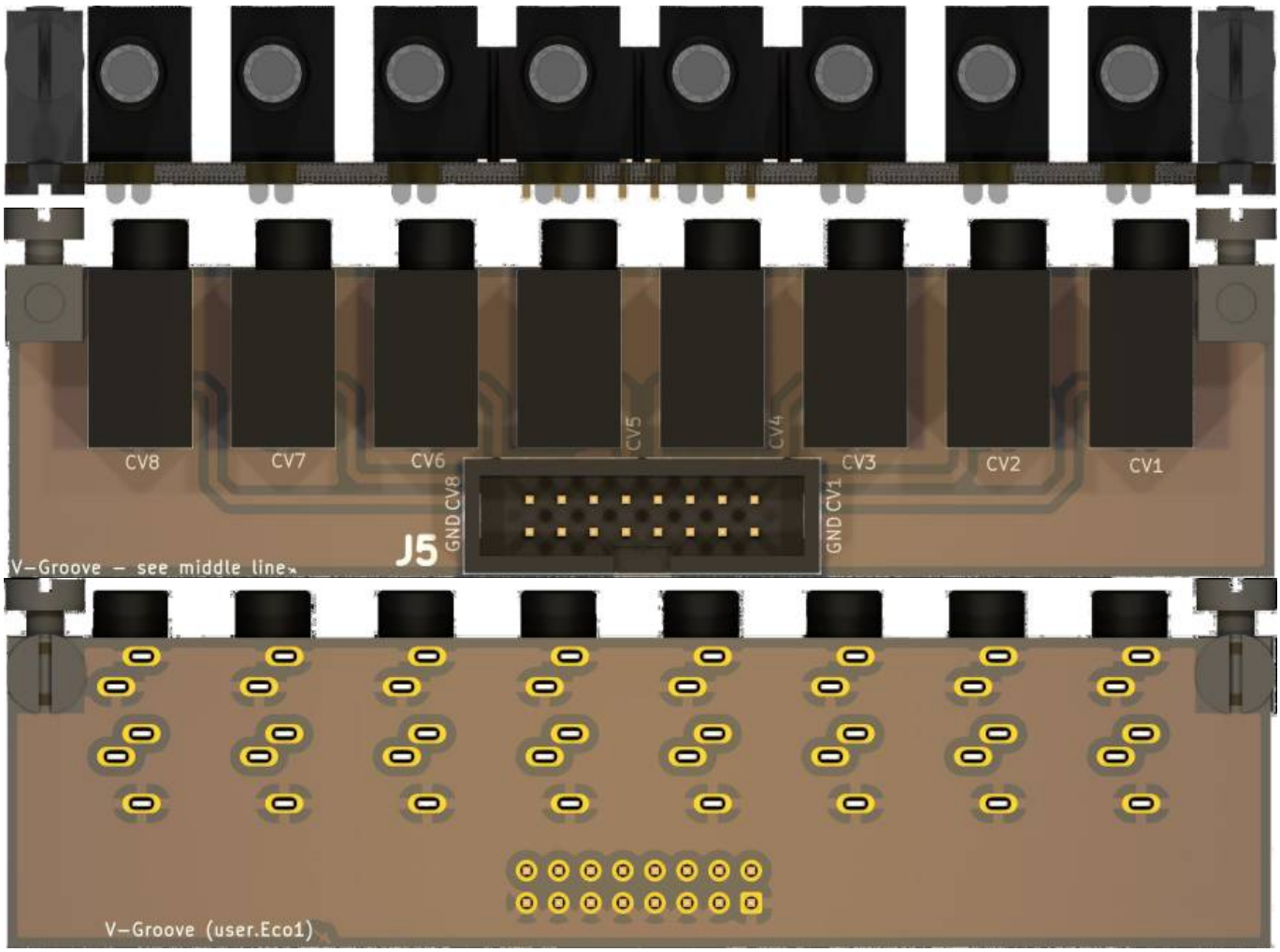

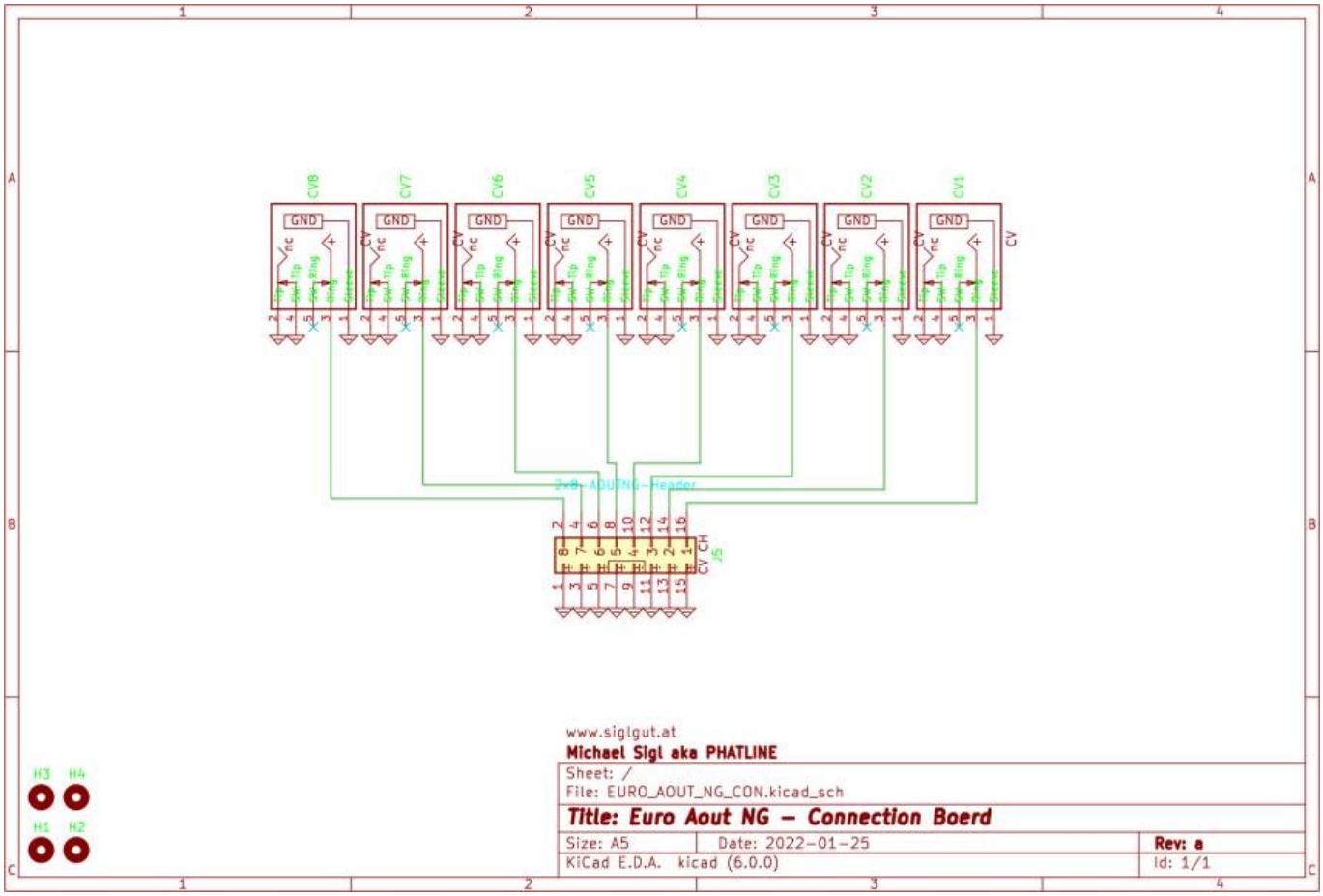

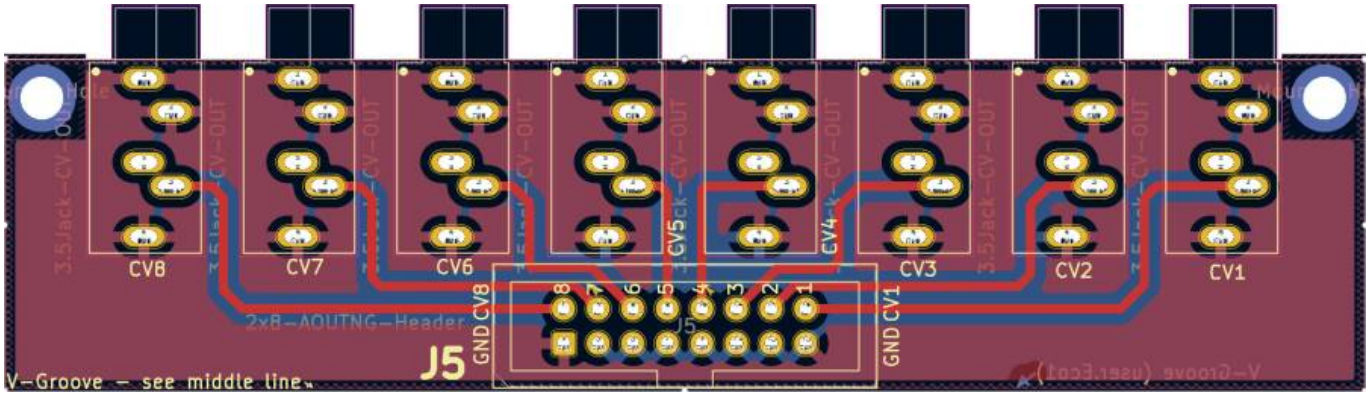

Hardware Requirements

- Soldering Iron - with a Dip that can Handle Thruhole-Parts solder Paste…
- The other Parts from the BOM
- a Midibox Core32 + Aout-NG

Building and BOM

All necessery Information is printet on the PCB, but also check the Shematic…

Mouser:

Ref	Q	mouser	Type	Footprint	Description
J5	1	517-30316-6002	2×8 Pin Header	2×8 Pin Header 2.54 * 2.54 Pitch	to connect to Aout-NG J5
J5	2	710-61201623021	2×8 Pin Header	2×8 Pin Header 2.54 * 2.54 Pitch	to connect to Aout-NG J5
U3	1	771-74HC14D-T	74HC14	SOIC-14	SOLDER SKILLs
Cable	1	617-09180407001	Flat		a quantity forEver - you may have that already

4x (or 20x) Leiterplatten Montageblock aka Standoffs 100x summed 30€
You will also need M3 Screws - 2 off them...
Also here it is clever to order 100 pieces for a cheaper price - you will need this on all my projects...

Frontpanel

Recommend Material
2mm x 128.5 x 17.78 Aluminium, anodised

A cheaper way is: order a 1,6mm thick Aluminium PCB as Frontpanel:
I will test this... this are the gerbers:

To Do

waiting for the PCBs and Panels...

Community users working on it

- **Phatline** = PCB & Shematic, Documentation...

Just let a Private message on the forum to user already involved.

From:
http://wiki.midibox.org/ - **MIDIbox**

Permanent link:
http://wiki.midibox.org/doku.php?id=euro-aout-ng-connector-board&rev=1643078616

Last update: **2022/01/25 02:43**