EuroRack - AOUT-NG - IO-Port and Frontpanel

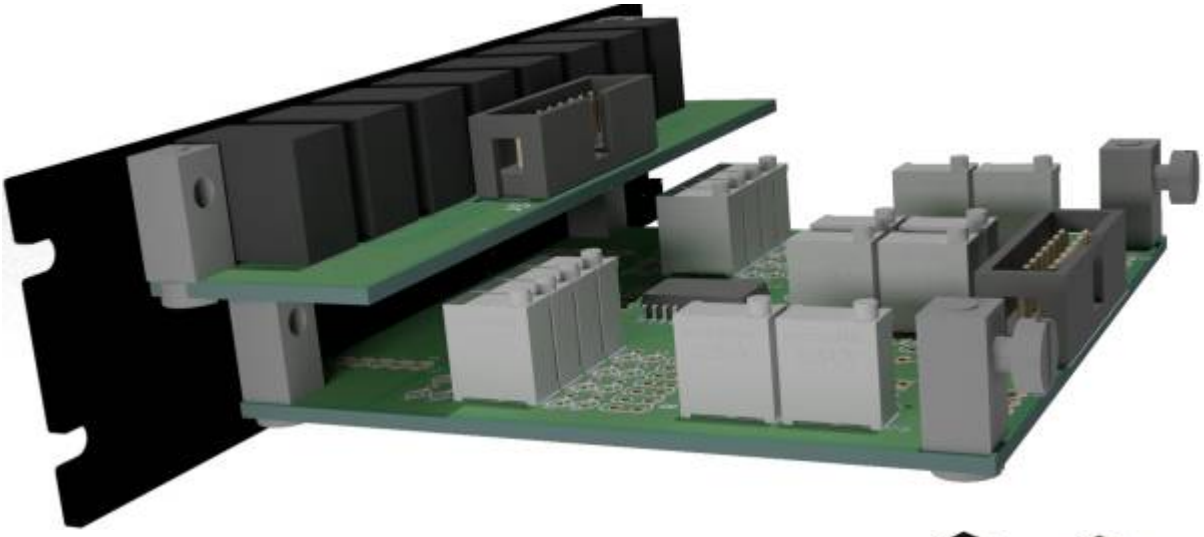

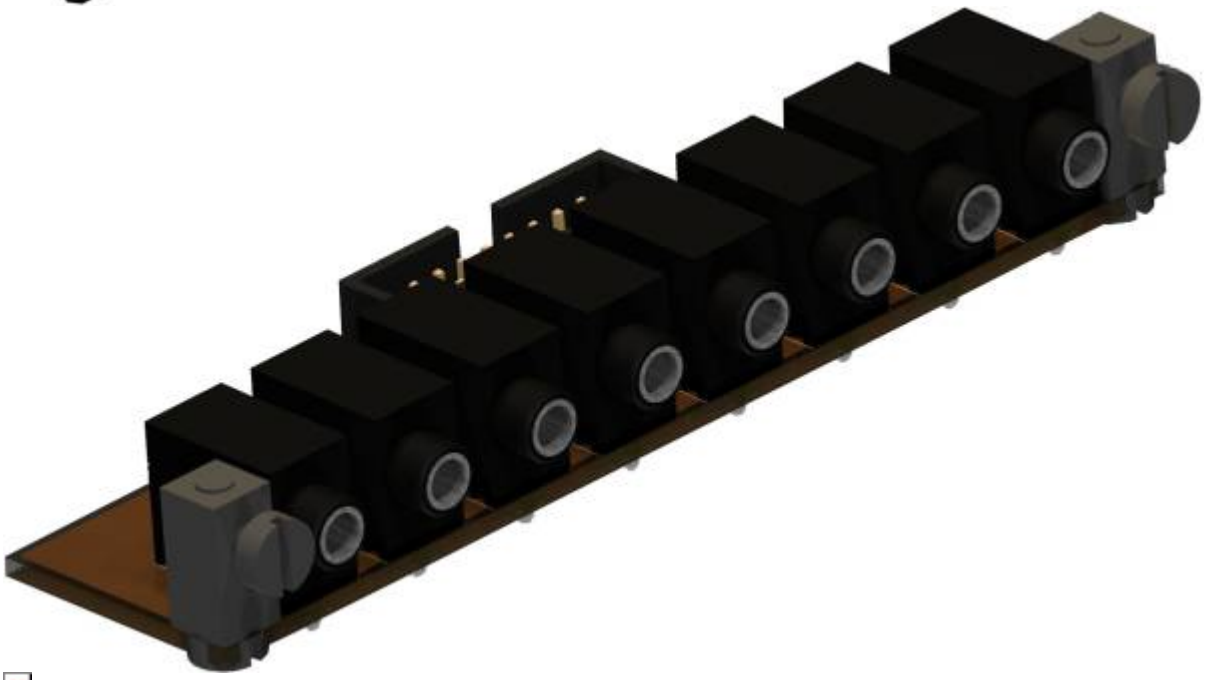

PCB Size is 100x40mm

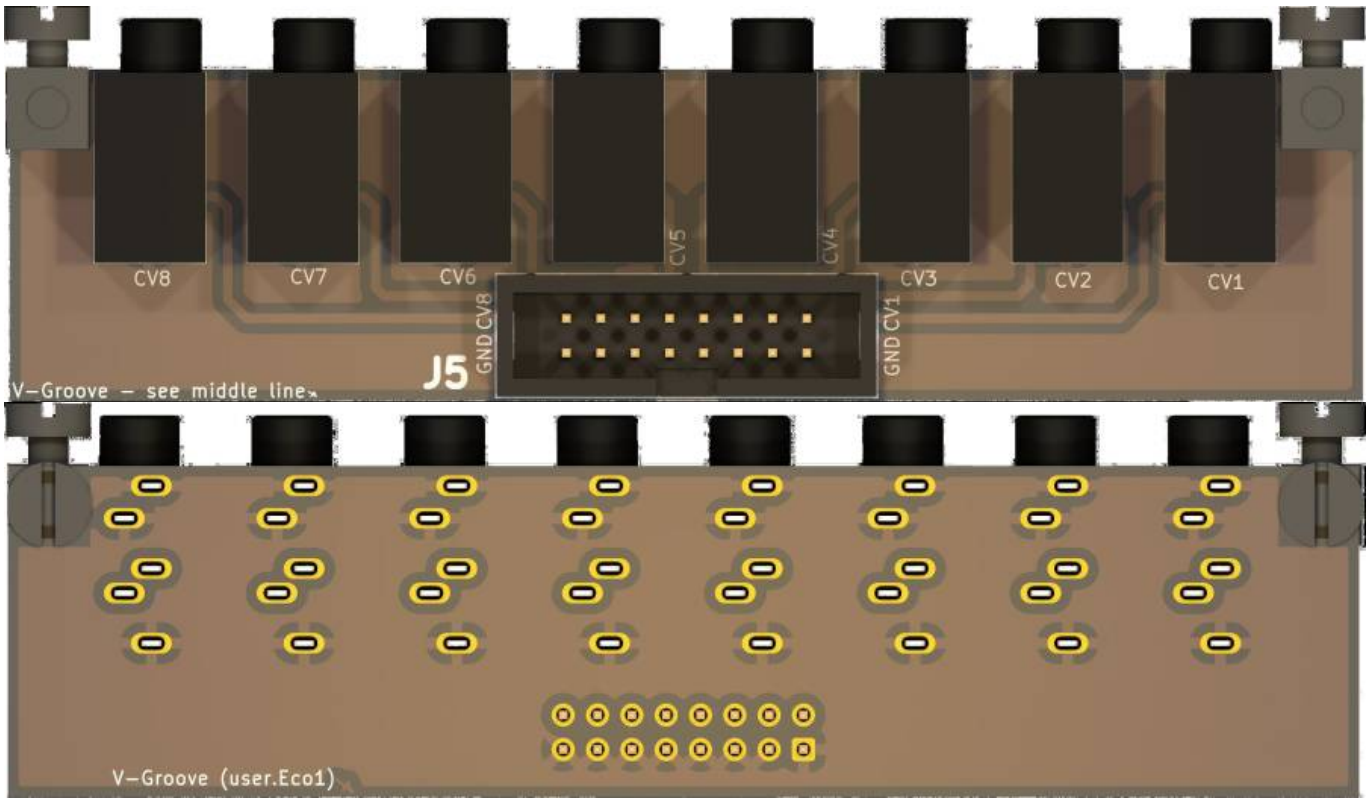
CV8
CV7
CV6
CV5
CV4
CV3
CV2
CV1
GND CV8
GND CV1
J5
V-Groove - see middle line
V-Groove (user.Eco1)

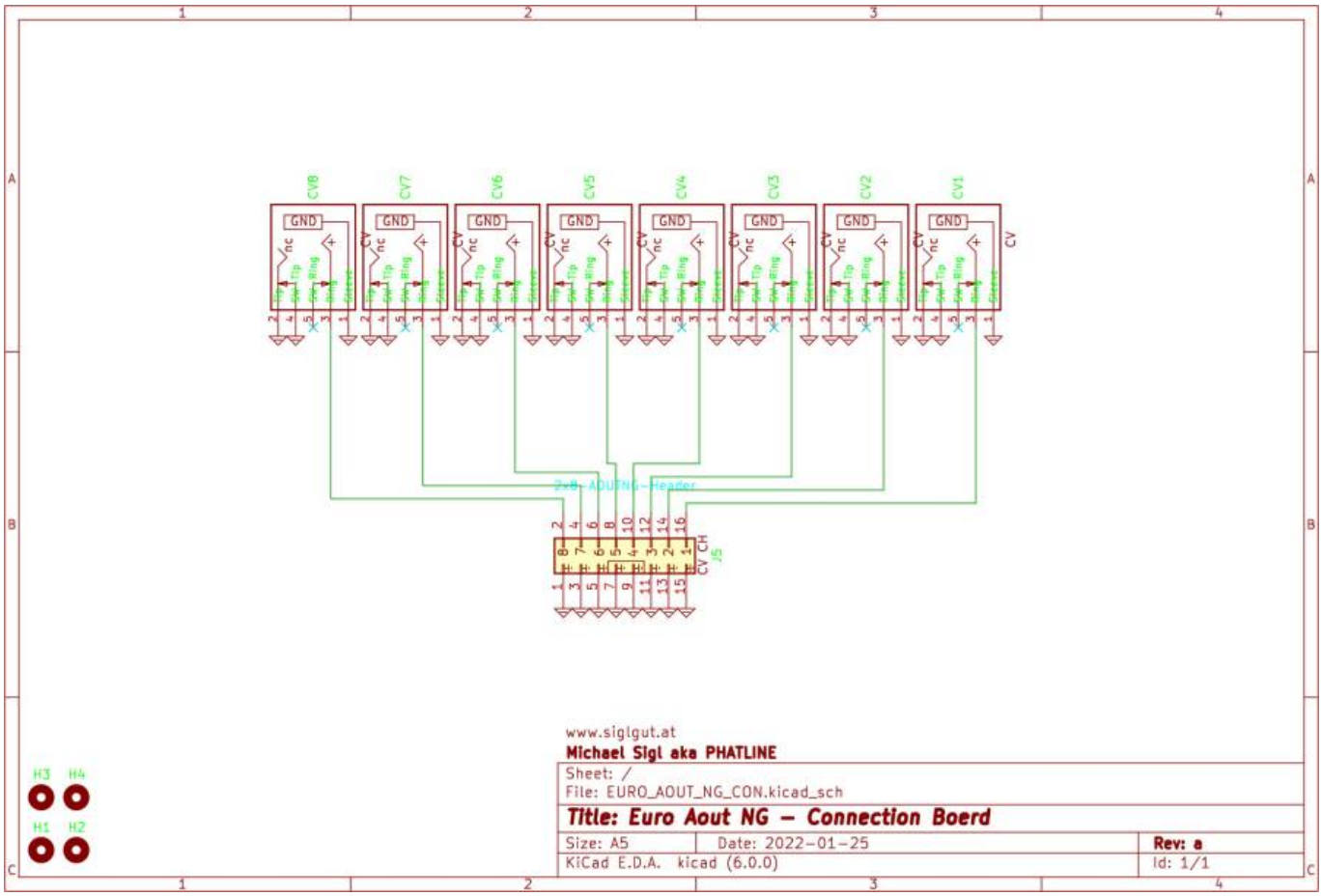
CV8
CV7
CV6
CV5
CV4
CV3
CV2
CV1
GND
2x8 ADUINO-Header
J5
CV CH
H3 H4
H1 H2
www.siglgut.at
Michael Sigl aka PHATLINE
Sheet: /
File: EURO_AOUT_NG_CON.kicad_sch
Title: Euro Aout NG - Connection Boerd
Size: A5
Date: 2022-01-25
Rev: a
KiCad E.D.A. kicad (6.0.0)
Id: 1/1

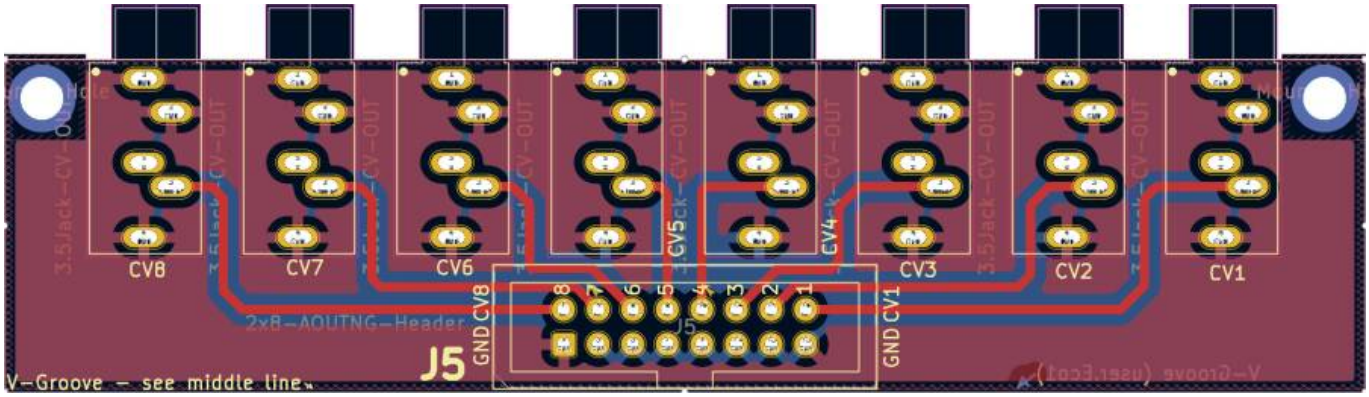

Hardware Requirements

- Soldering Iron - with a Dip that can Handle Thruhole-Parts solder Paste…
- The other Parts from the BOM
- a Midibox Core32 + Aout-NG

Building and BOM

All necessery Information is printet on the PCB, but also check the Shematic…
Mouser:

Ref	Q	mouser	Type	Footprint	Description
J5	1	517-30316-6002	2×8 Pin Header	2×8 Pin Header 2.54 * 2.54 Pitch	to connect to Aout-NG J5
J5	2	710-61201623021	2×8 Pin Header	2×8 Pin Header 2.54 * 2.54 Pitch	to connect to Aout-NG J5
U3	1	771-74HC14D-T	74HC14	SOIC-14	SOLDER SKILLs
Cable	1	617-09180407001	Flat		a quantity forEver - you may have that already

2x Leiterplatten Montageblock aka Standoffs 100x summed 30€
You will also need M3 Screws - 2 off them…
Also here it is clever to order 100 pieces for a cheaper price - you will need this on all my projects…

if you order the PCB via my Gerbers you get 4 PCB on 1 100x100mm PCB… on JLCPCB you get min 5 of thes PCBs… so you may order the needet Parts 20x times

Frontpanel

Recommend Material
2mm x 128.5 x 17.78 Aluminium, anodised

A cheaper way is: order a 1,6mm thick Aluminium PCB as Frontpanel:
I will test this… this are the gerbers:

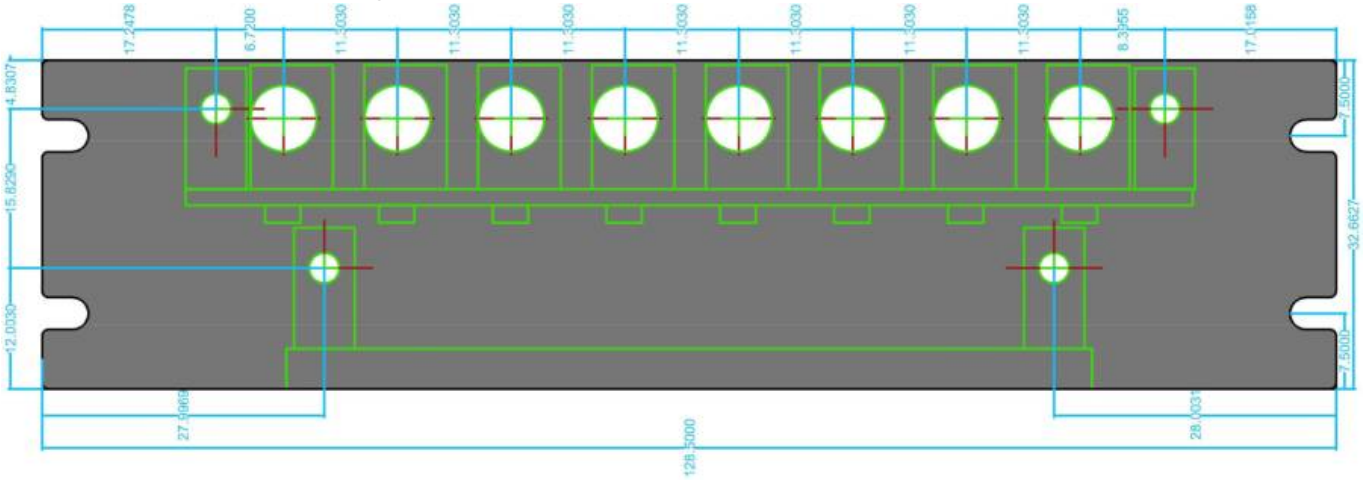

To Do

waiting for the PCBs and Panels…

Community users working on it

- **Phatline** = PCB & Shematic, Documentation…

Just let a Private message on the forum to user already involved.

From:
http://wiki.midibox.org/ - **MIDIbox**

Permanent link:
http://wiki.midibox.org/doku.php?id=euro-aout-ng-connector-board&rev=1643166827

Last update: **2022/01/26 03:13**