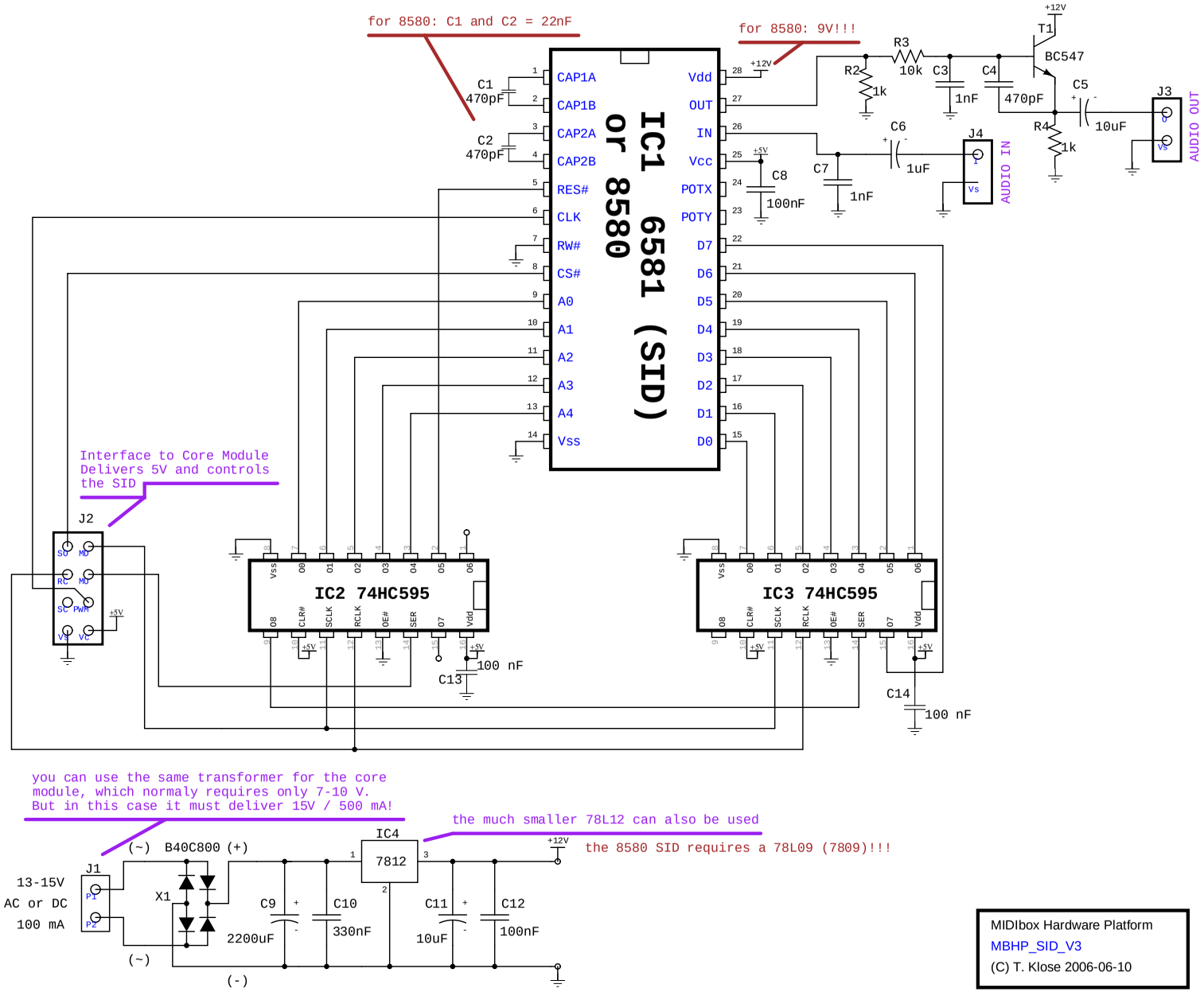
for 8580: C1 and C2 = 22nF
for 8580: 9V!!!
IC1 6581 (SID) or 8580
CAP1A
CAP1B
CAP2A
CAP2B
RES#
CLK
RW#
CS#
A0
A1
A2
A3
A4
Vss
Vdd
OUT
IN
Vcc
POTX
POTY
D7
D6
D5
D4
D3
D2
D1
D0
C1 470pF
C2 470pF
C8 100nF
C7 1nF
C6 1uF
R2 1k
R3 10k
C3 1nF
C4 470pF
R4 1k
C5 10uF
T1 BC547
+12V
+5V
J3
J4
AUDIO IN
AUDIO OUT
Interface to Core Module
Delivers 5V and controls
the SID
J2
SO MO
RC MO
SC PWM
VI VC
IC2 74HC595
IC3 74HC595
Vss Q0 Q1 Q2 Q3 Q4 Q5 Q6
Q8 CLR# SCLK RCLK OE# SER Q7 Vdd
C13 100 nF
C14 100 nF
you can use the same transformer for the core
module, which normaly requires only 7-10 V.
But in this case it must deliver 15V / 500 mA!
the much smaller 78L12 can also be used
the 8580 SID requires a 78L09 (7809)!!!
13-15V
AC or DC
100 mA
J1
P1
P2
(~)
B40C800 (+)
X1
(-)
C9 2200uF
C10 330nF
IC4
7812
C11 10uF
C12 100nF
MIDIbox Hardware Platform
MBHP_SID_V3
(C) T. Klose 2006-06-10