MIDIbox SEQ BLM 16x4 Control Surface PCB

In order to enhance my MB SEQv4 with an internal 16×4 BLM (**B**utton **L**ED **M**atrix) I have created the printed circuit board shown in the lower half of the picture below. It has been verified to work and you can find all the information necessary to build one yourself on this page.

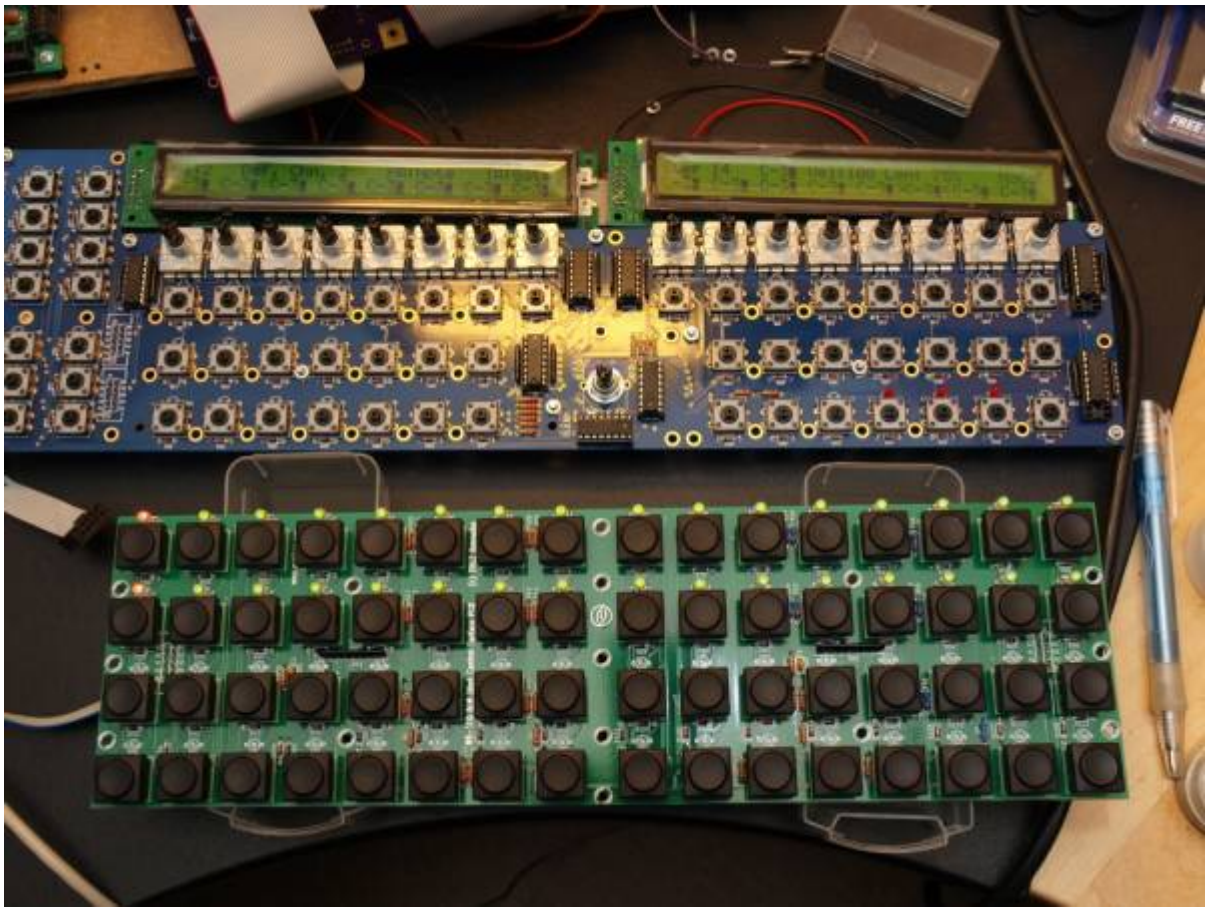

Overview

The board holds all necessary components including surface mount shift registers (DOUT and DIN) on the backside and connects via a single 10pin cable to J2 on Wilba's control surface board. Additional modules (BPM and TPD displays) can be connected to a second 10pin connector that loops through all serial I/O signals from J8/J9 of the Core32/LPC17 board. The board features duo LEDs and the very nice Marquardt 6425 series of buttons with the 16mm square caps.

The buttons do not align with Wilba's MB-SEQ frontpanel design. The reason for this is simple: In my front panel there is a TPD (Track Position Display), a step display, and a BPM display to the left of the button / Duo-LED matrix. A second reason is that the protoboard manufacturer I used (Gold Phoenix PCB) has a size limit that I had to respect.

Schematic

The schematic for the 16×4 BLM is based on the official one as proposed by TK over here. However, I

have redrawn it to show all the components that are sitting on the PCB. Here it is.

PCB Layout

The layout of the PCB is rather straight forward. Placement of buttons and LEDs was predefined by the 16×4 matrix arrangement, and a certain number and distribution of mounting holes were required to prevent the board from flexing even under heavy manual treatment. Placement of all other components follows these constraints. As a result it was necessary to use SMD versions of the ICs. However, this is no big deal - with a bit of flux these are easily soldered after some practicing.

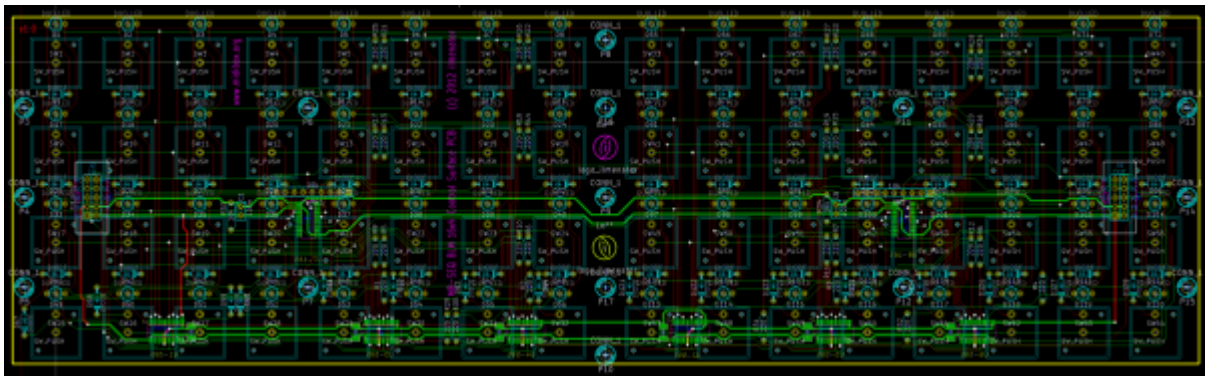

Here are the Gerber files for ordering the PCB from your favorite boardhouse. You are free to use them for non-commercial purposes only. In other words, you are not allowed to make money from my design 😎.

There is no silkscreen layer for the backside of the PCB. However, each IC has its reference etched in copper next to its footprint. Also, pin 1 of each IC is clearly marked with a “1” next to the corresponding pad, and all 100nF SMD capacitors (C2-C7) sit close to the ICs.

The total size of the PCB is 335.15mm x 97.92mm.

PCB Layout v2.0

Meanwhile, I have created a version 2 of the board, which basically has all the features of the original one, plus it can hold three different types of switches:

- the Marquardt 6425 series (my favourite switches)

- ITT Schadow D6 series (TK's favourite switches)

- E-Switch 612-TL1100 series (the ones that Wilba used on the SEQ v4 board).

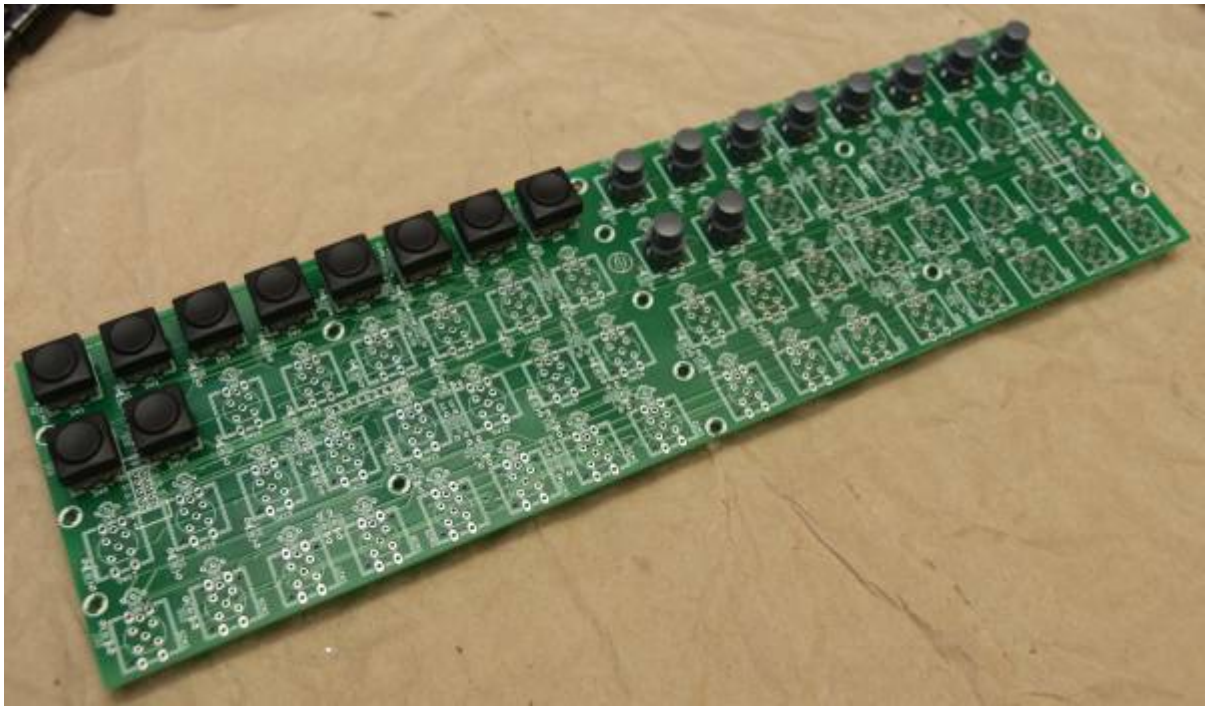

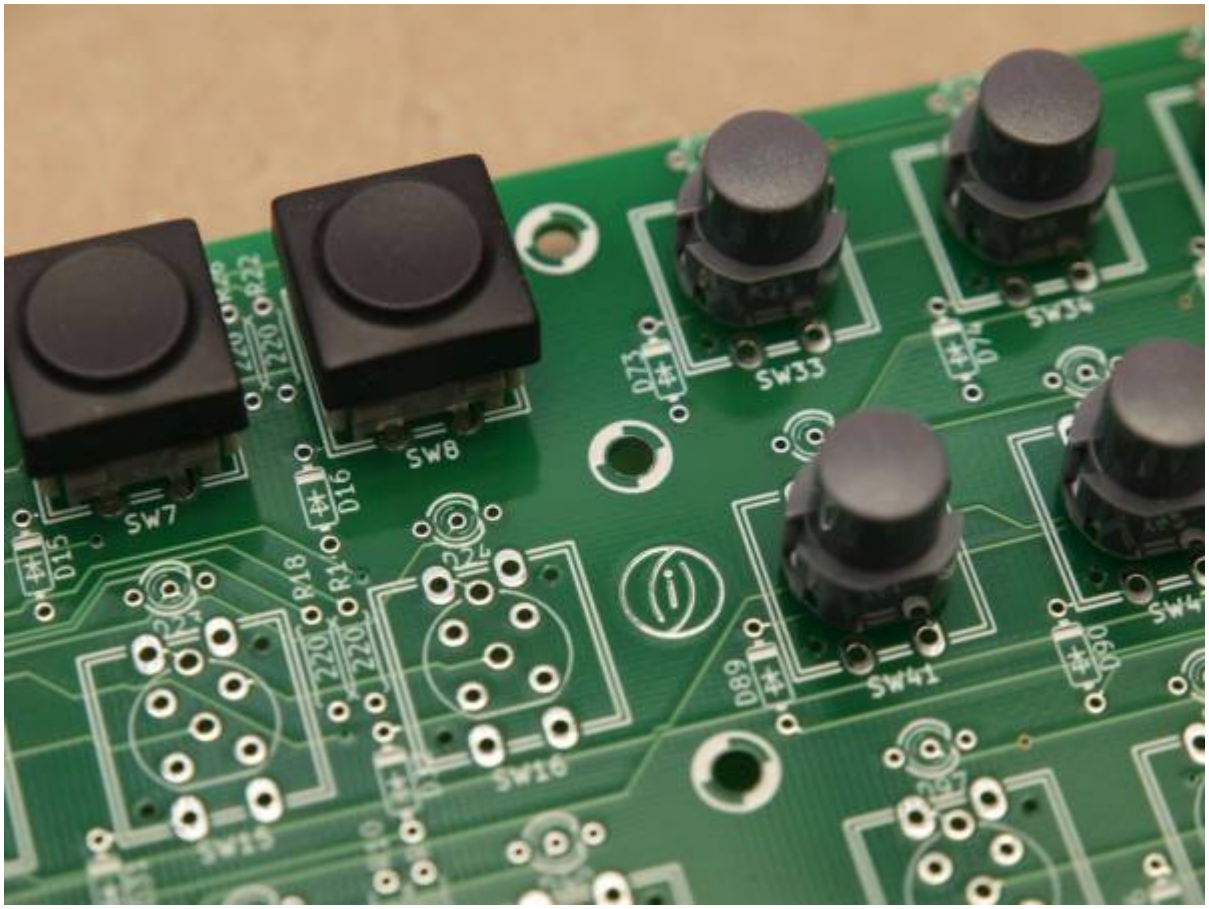

Where to buy?

If you are interested in building this, send a personal message (PM) to user *ilmenator* over at the MIDIbox forum (you have to register to be able to send PM). As of September 2025, I have PCBs available for 25€ each. I can also provide you with complete kits with Marquardt or D6 switches in black.

BOM

Reference	Description	Package	Value	Quantity	Mouser	Reichelt	soselectronic
C1, C8	capacitor	2.54mm pitch	100n	2		KERKO 100N	
C2-C7	capacitor	SMD 1206	100n	6		X7R-G1206 100N	
D1-D8, D17-D24, D33-D40, D49-D56, D65-D72, D81-D88, D97-D104, D113-D120	3-legged duo LED	3mm	common cathode	64	859-LTL1BEKVJNN		
D9-D16, D25-D32, D41-D48, D57-D64, D73-D80, D98-D96, D105-D112, D121-D128	1N4148	DO-35		64		1N 4148	
RR1, RR2	1 + 8 Resistor network	SIL9	10k	2		SIL 9-8 10K	
R1-R32	1/4W resistor		220	32		1/4W 220	
R33, R34	1/4W resistor		10k	2		1/4W 10K	
SW1-SW64	push switch	Marquardt 6425.0101*		64	979-6425.0101	TASTE 6425.0101	1325
	key cap	Marquardt 826.000.011	16x16mm	64		TASTE S 826 (red!)	1489
U1-U6	74HC595	SO16		6	863-MC74HC595ADG	SMD HC 595	
U7, U8	74HC165	SO16		2	863-MC74HC165ADR2G		
J1, J2	connector 2×5			2		WSL 10G	

* Button caps usually have to be ordered separately - these should be the 16x16mm types, not the 19x19mm!

Capacitors C2-C7, ICs U1-U8, and connectors J1-J2 are placed on the backside of the PCB. All other components are sitting on the front!

Frontpanel

I have had my frontpanel laser cut at Formulor, the German branch of Ponoko. Here is the template:

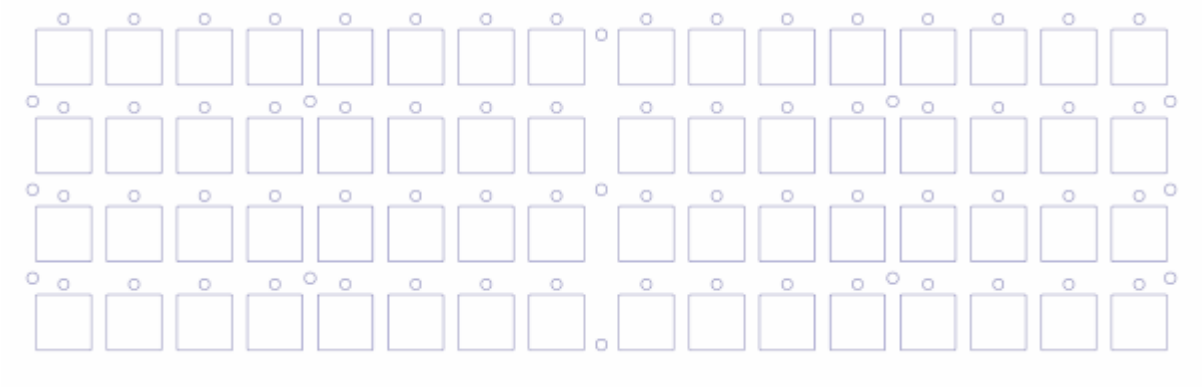

I used Adobe Illustrator to create the design. It can be downloaded in .ai, .dxf and .dwg format here. The latter two have been exported from Illustrator, I don't know if they are scaled properly, so be warned!

And finally, this is how it looks like with the PCB mounted to the frontpanel using 8.5mm long M3 spacers (8mm spacer and a 0.5mm thick washer). The front panel is made from 3mm thick acrylic and the buttons are sitting flush inside the frontpanel. This way it is easy to slide across the panel to activate neighboring buttons.



Note that I am using the 15.5mm button caps - apparently, Marquardt also has some in 18.3mm. Make sure you don't accidentally buy the wrong ones!

Config

You are most probably going to use this board together with the MB-SEQ V3/V4 PCB designed by

Wilba. To make it easy for you, here is the updated config file that holds all the shift register definitions necessary for the board to work properly. Then, J2 on this PCB has to be connected to J2 on Wilba's PCB.

From:
https://www.midibox.org/dokuwiki/ - **MIDIbox**

Permanent link:
https://www.midibox.org/dokuwiki/doku.php?id=16x4blm_pcb

Last update: **2025/09/21 10:36**