AIN_4 module

This is a simple way of scaling CVs (as might come from a modular) ready for an STM322F4 Core module.

Schematic

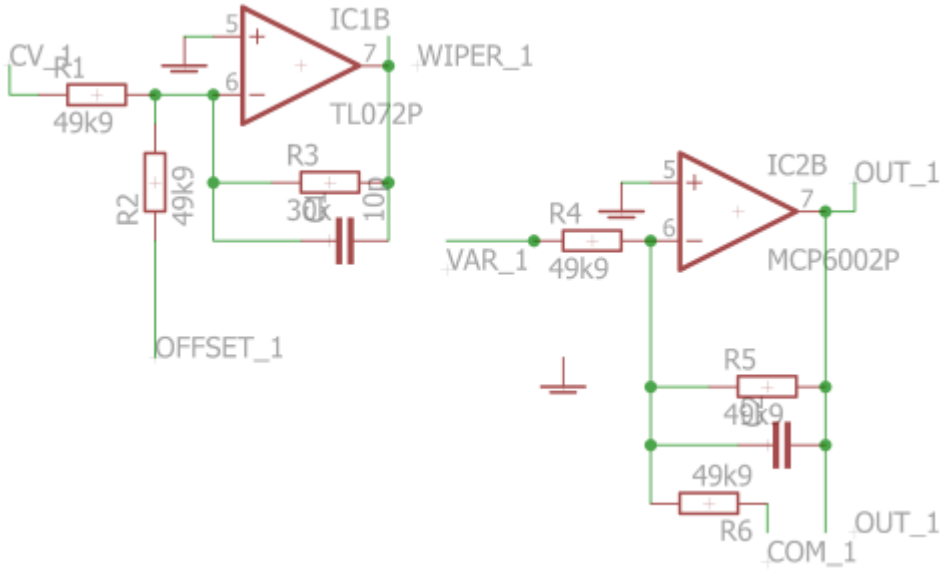

The circuit is a very simple series of two inverting amplifiers per channel. The first is a TL072 powered from +12/-12V, while the second is an MCP6002 powered from 3v3/0V (ground). It's possible to preset the ranges (see below) but it's probably more useful to use the associated Control Board.

For bipolar operation, a +5V reference may be switched in. The output of the first stage is interrupted by a pot in order to attenuate the signal. The second stage has variable gain from -1 to -0.5 by way of a switched resistor. Hence one can easily select between 0-5V, 0-10V and +/- 5V input ranges to optimise the signal amplitude reaching the ADC. Because the second op amp is powered at the same voltage as the MCU (ideally the same rail), its inputs are protected from over- and under-voltages.

BOM

Type	Qty	Value	Package	Parts	Notes
resistors					
	20	49k9	0204/7	R1, R2, R4, R5, R6, R7, R8, R10, R11, R12, R13, R14, R16, R17, R18, R19, R20, R22, R23, R24	
	4	30k	0204/7	R3, R9, R15, R21	nominal gain can be adjusted e.g. (22k/49.9k)*5V = 2.2V
capacitors					

Type	Qty	Value	Package	Parts	Notes
resistors					
	4	10p	025×050	C1, C3, C5, C7	
	9	100n	025×050	C10, C12, C13, C14, C15, C16, C17, C18, C20	remove 1 if powering from Core
	3	10u	electrolytic 2,5-6	C9, C11, C19	remove 1 if powering from Core
	4	optional	025×050	C2, C4, C6, C8	can use another e.g. 10pF cap here for more filtering
inductors					
	2	BEAD	5MM	L1, L2	
ICs					
	2	MCP6002P	DIL08	IC2, IC4	sockets are recommended
	2	TL072P	DIL08	IC1, IC3	sockets are recommended
Vreg					
	1	optional	TO-220	VR1	remove if powering from Core
headers					
	7		1X02_SMALL	JP1, JP2, JP3, JP4, JP5, JP6, JP7	check board for headers as SIL strips of 3, 5 or 6
	8		1X03_SMALL	JP8, JP9, JP10, JP11, JP12, JP13, JP14, JP15	
	2		2*5 (shrouded)	J1, J2	

Assembly

Putting the board together is simple. As usual, start with the flattest components and work your way up.

Resistors

- four 30k resistors marked in pink
- remainder are 49k9
- for best results, match R1/R2, R7/R8 (and so on), and R4/R5/R6, R10/R11/R12 (and so on).
- the value is less important than the minimum deviation.

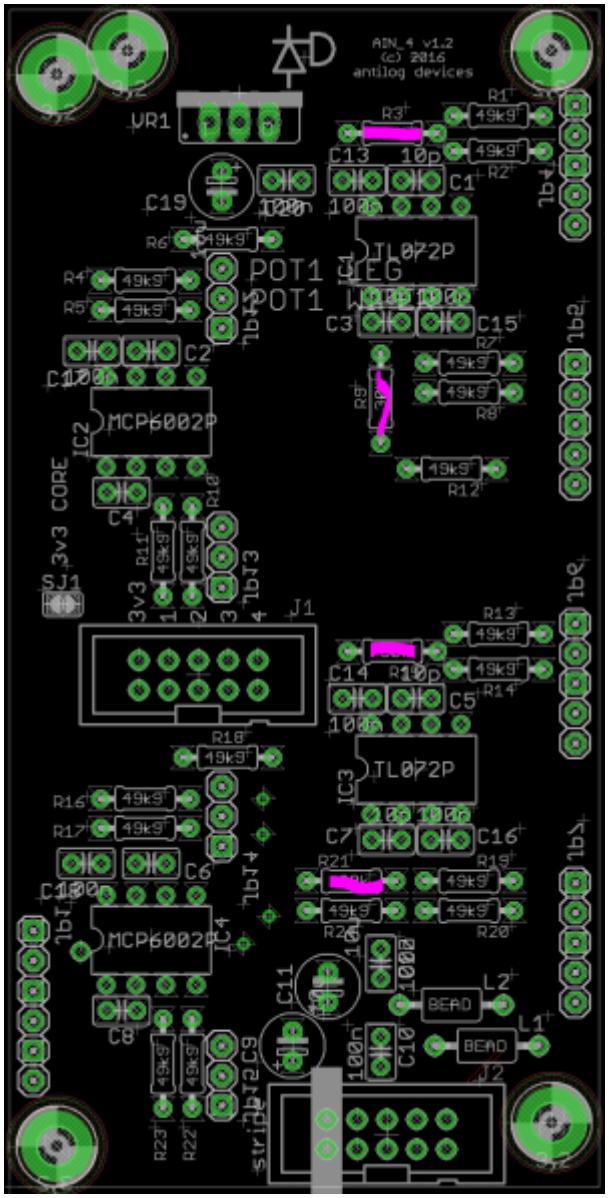

Capacitors

- four 10p as marked in pink
- electrolytics in yellow
- blue are optional
- remainder are 100n.

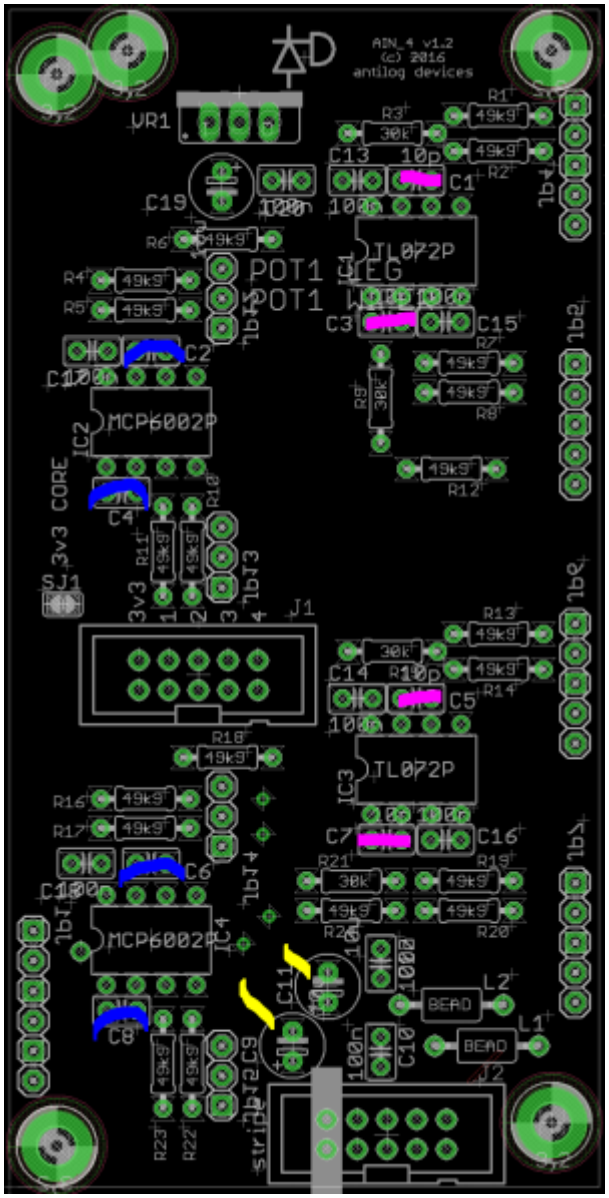

Power

- J2 is a standard Eurorack header
- red = -12V
- blue = +12V
- green = 0V(ground)
- for Core power, bridge the solder jumper marked in yellow
- otherwise install the Vreg circuit in pink
- **IMPORTANT** only choose one of these 3v3 power options! Don't install the regulator if the solder jumper is bridged.

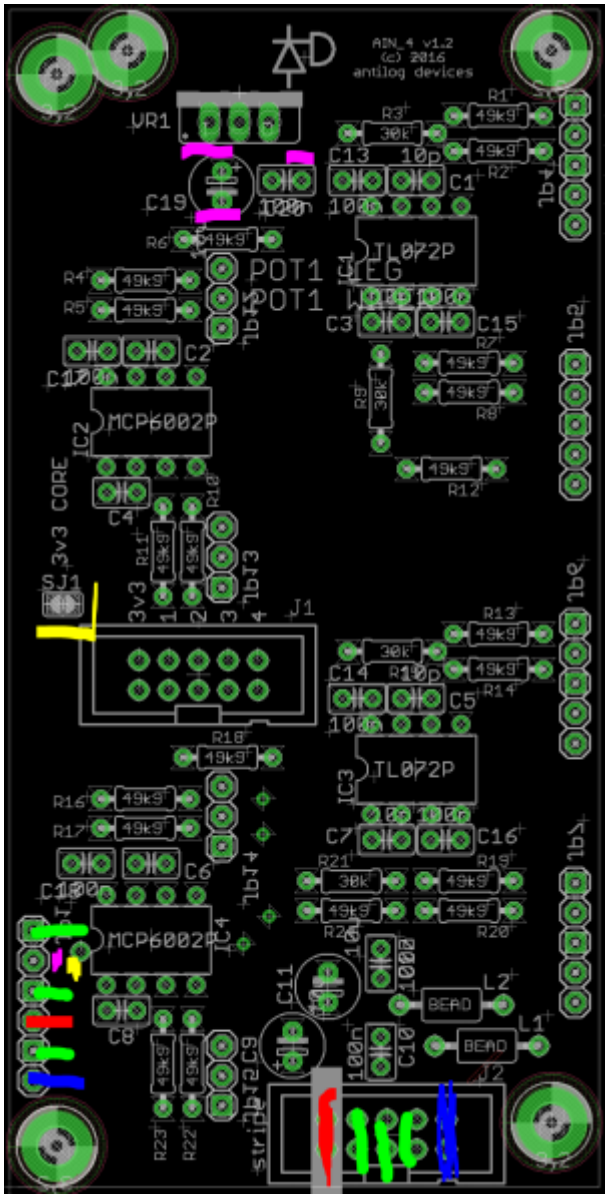

Standalone use

For simplest results, use the complementary Control Board. Otherwise see below for header functions.

Five pin header

- IN = CV input
- for scaling bipolar CVs, connect or switch into OFFSET (e.g. +5V; n.b. the offset should be referenced to the common 0V)
- for 0-5V operation, leave SWITCH open; for 0-10V operation, jumper or switch in COMMON to POLE

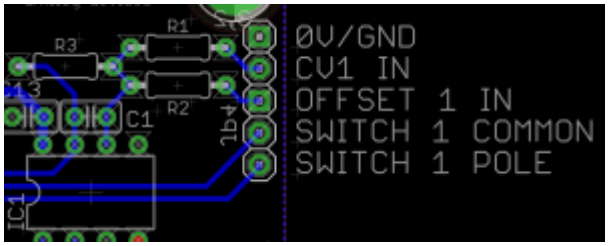

Three pin header

- with a 100k pot facing you, solder the left leg to 0V(ground)
- centre to WIPER
- right to LEG
- WIPER and LEG may be jumpered if pots aren't desired, but it is quite useful to have an attenuator to trim down variable CVs or even clip the second op amp for crunchy waveforms!

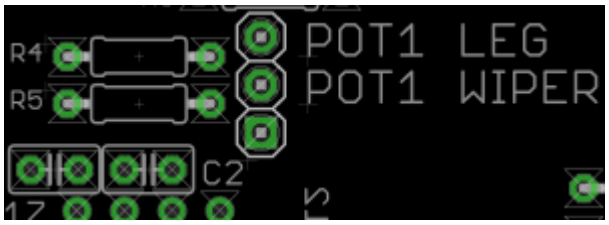

Interconnection to Core

J1 carries the scaled CV to J5A or J5B of an STM32F4 Core module.

License

Currently the design is © 2016 antilog devices with all rights reserved; all documentation is CC BY-NC-SA 3.0.

From:
https://wiki.midibox.org/ - **MIDIbox**

Permanent link:
https://wiki.midibox.org/doku.php?id=ain_4&rev=1470846422

Last update: **2016/08/10 16:27**