CC-Looper

CC-Automation
Midi Control Change MotionSequencer - for Synthesizer with LEDRINGS

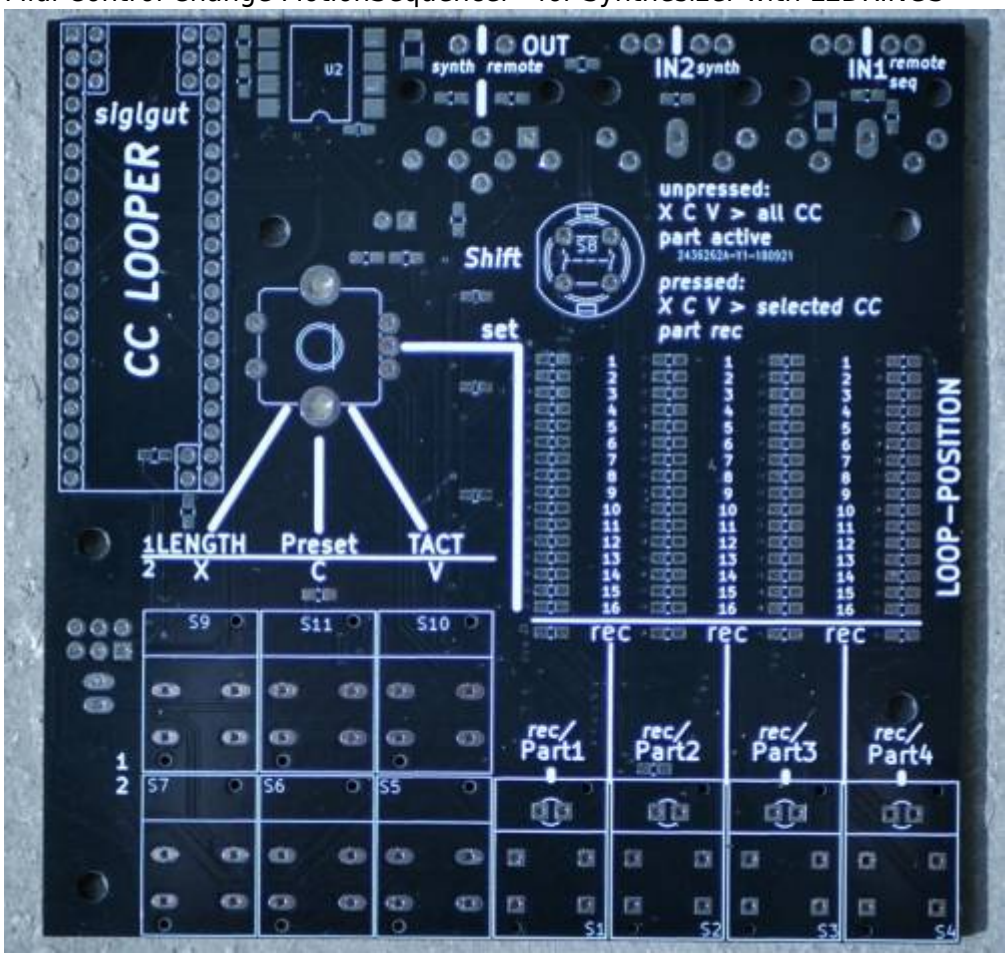

Features

* 4Midichannels @ each 512Steps X 32th-looprate X 128 CCs
* only a few of the 128CC should be used @ once - 4x128xCCs @ 32th is Midi Data MESS and µC Death
* maybe only 256Steps, will depend on RAM.... RealWorld will tell
* each TRACK has a shared Track length for all its 128 CCs
* Copy, Paste, Clear: for the all 128CCs/or single CC
* There is no EDIT, you can clear a CC or Track and make a new Take
* ProgramChange Load and Store on microSD-Card, Load and Store are CC-Commands, so you can remote the device
* The Sequencer can be set to Tact Systems: 3/4 4/4 5/4 7/4 9/4 11/4 13/4

Hardware Requirements

External Requirement:(for example)

- You need a Synth with LEDRINGs - otherwise you have no Feedback and Overview - NordRack III is such one
- Melody/Clock Source with ProgramChange-Output: midibox_seq_v4l oops that dont do PC...
- Melody/Clock/CC Destination: NordRack III or any other Synth with Visual Feedback off CC-States

Midibox:

- dipcoref4 - this is the µC Brain for the Looper
- cc-looper - this is the UI-PCB of the Looper
- no other PCBs needet

- µSD-Card, formated with FAT32
- Soldering Iron - with a Dip that can Handle SMD-Parts, Wires, solder Paste for the µC....
- USB Power Supply with µUSB-Connector

Set

Cabeling

Midi IN1 »> MelodySequencer and Remote Devices
Midi IN2 »> Midi Out from Synthesizer - which sends out the Moved CCs
Midi OUT »> Midi IN of Synthesizer input (Automated CCs merged with mididata from Midi IN1)

Software

Firmware

Fix Me! Firmware not made yet

Building

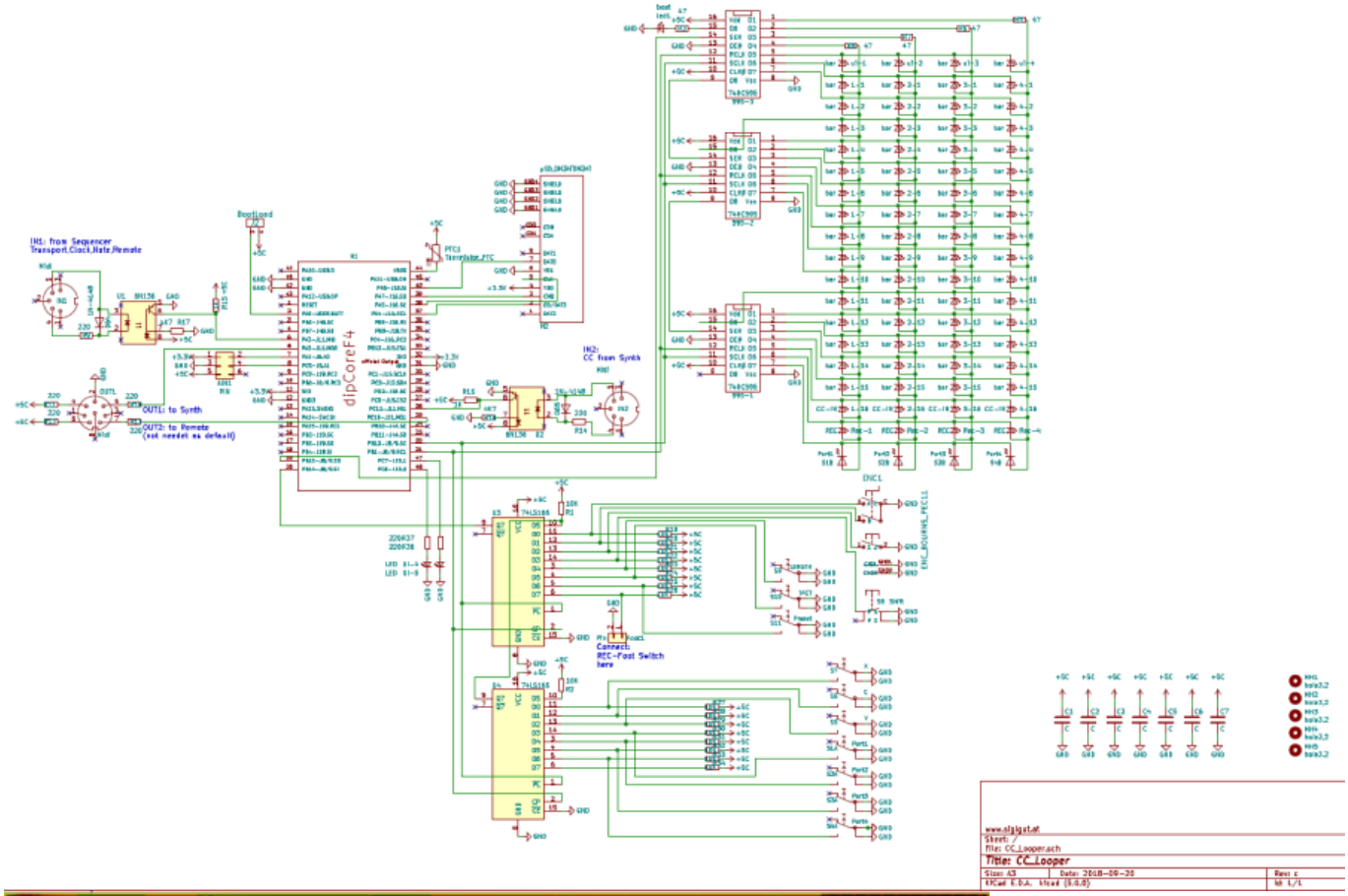
IN1: from Sequencer
Transport,Clock,Hate,Remote
OUT1: to Synth
OUT2: to Remote
(not needed as default)
dipCoreF4
IN2:
CC from Synth
Connect:
REC-Foot Switch
here
www.siglgut.at
Title: CC_Looper
Size: A3
Date: 2018-09-20
Rev: c

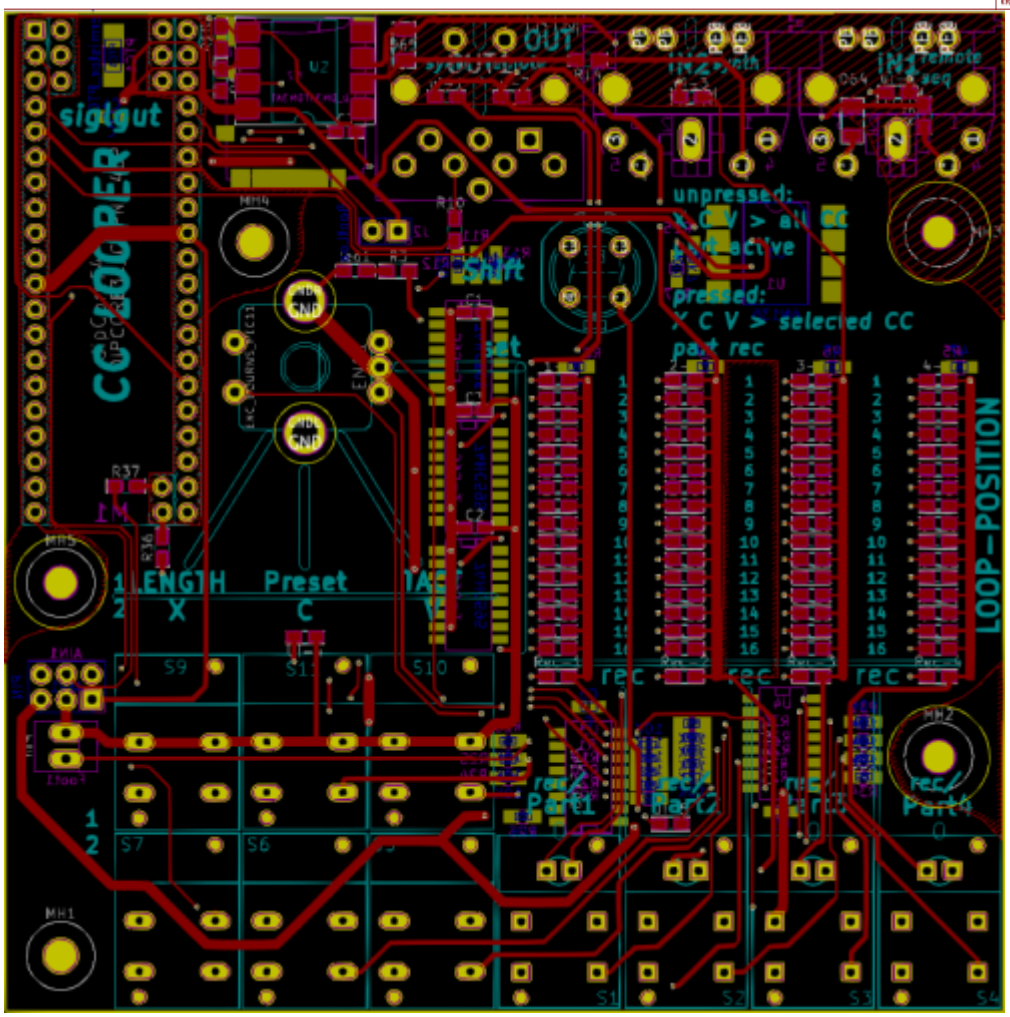
siglgut
CC LOOPER
OUT
IN2
IN1
remote
seq
unpressed:
X C V > all CC
pass active
pressed:
X C V > selected CC
part rec
shift
set
LENGTH
Preset
TAP
X
C
rec
LOOP-POSITION
Part1
Part2
Part3
Part4

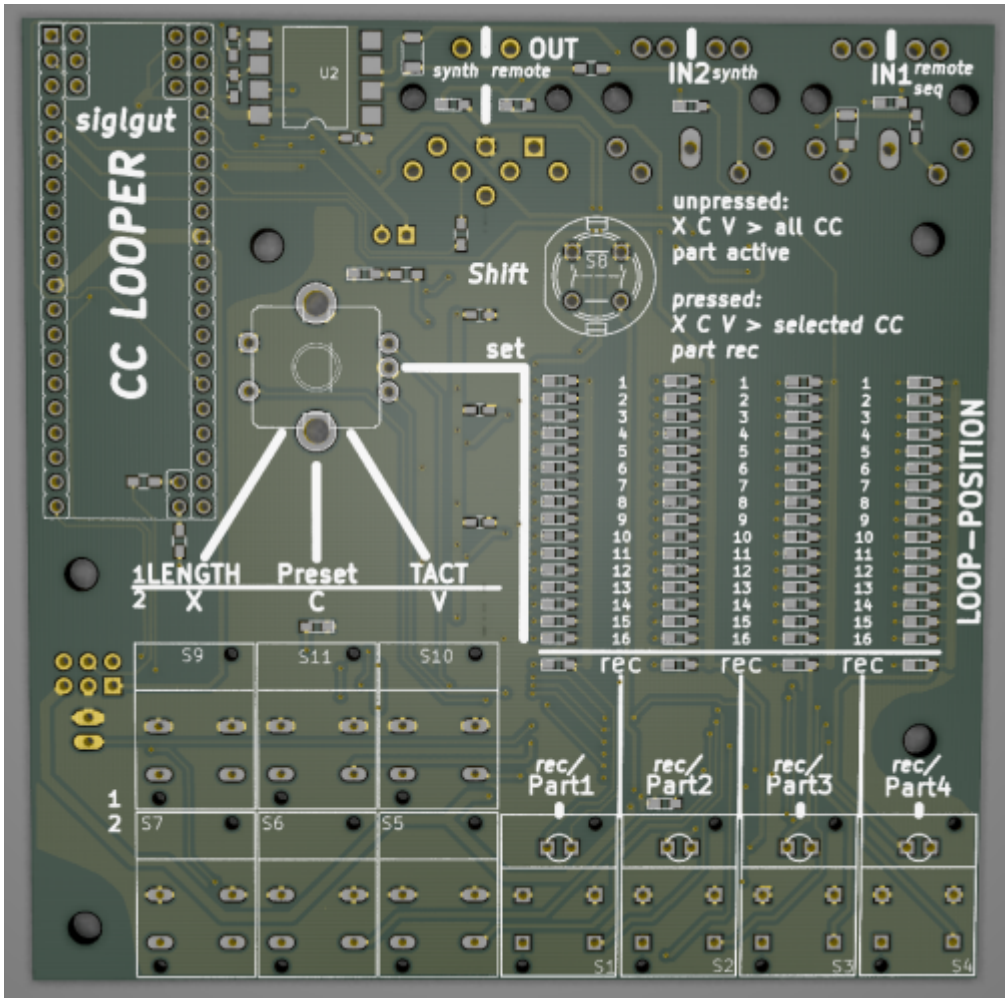

Frontpanel

Fix Me! - a clear Acrylic Frontplate, with NO Engravings, UI-Labeling is viewable from PCB

Case

BOM

To Do

alot, beta test, programming the firmware, housing

Resources

its based on a mixture off:

- msq-cc-lre
- msq-cc-bcr

but its a complete new design, and firmware

Community users working on it

- **Phatline** = Programming, Documentation...

Just let a Private message on the forum to user already involved.
I have 10 ProtoBoards here - i test one, and if it works, i can share them for Beta Testing-if you pay the postage

From:
https://wiki.midibox.org/ - **MIDIbox**

Permanent link:
https://wiki.midibox.org/doku.php?id=cc-looper&rev=1539132655

Last update: **2018/10/10 00:50**