Control Panel for AIN_4 & AOUT_4 v1.2

AIN4 - AOUT4 v1.2 TOP

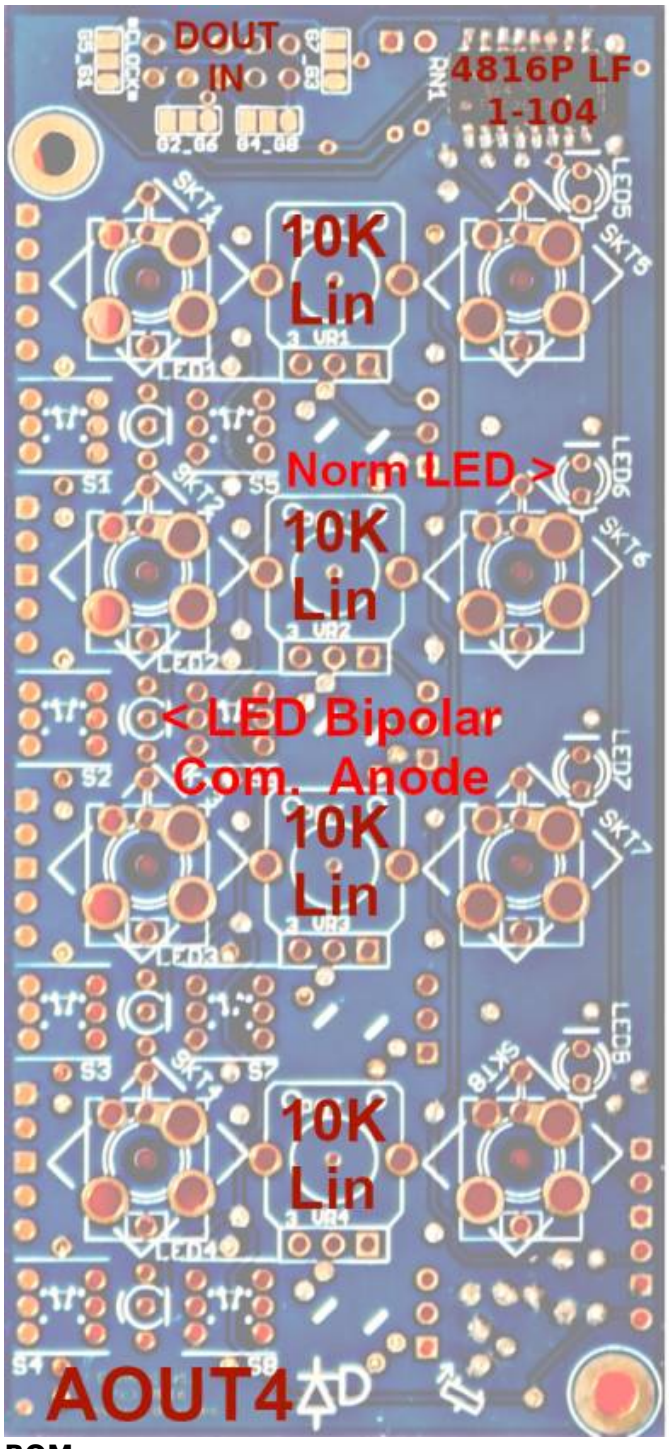

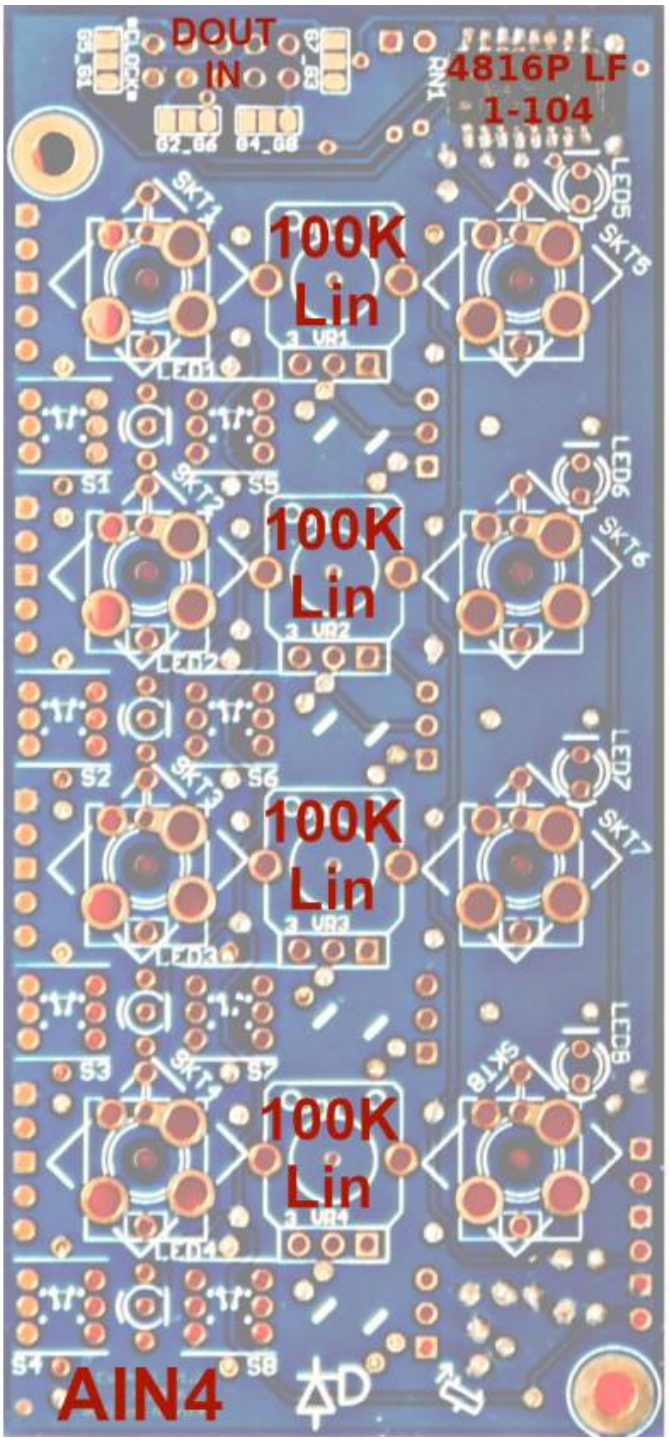

BOM:

8x Switch better take mouser ones...
LED5-8: Normal LEDs
LED1-4: Bipolar LED comman Anode
VR1-4 AOUT4: 10K Lin
VR1-4 AIN4: 100K Lin

AIN_4 v1.2 BACK

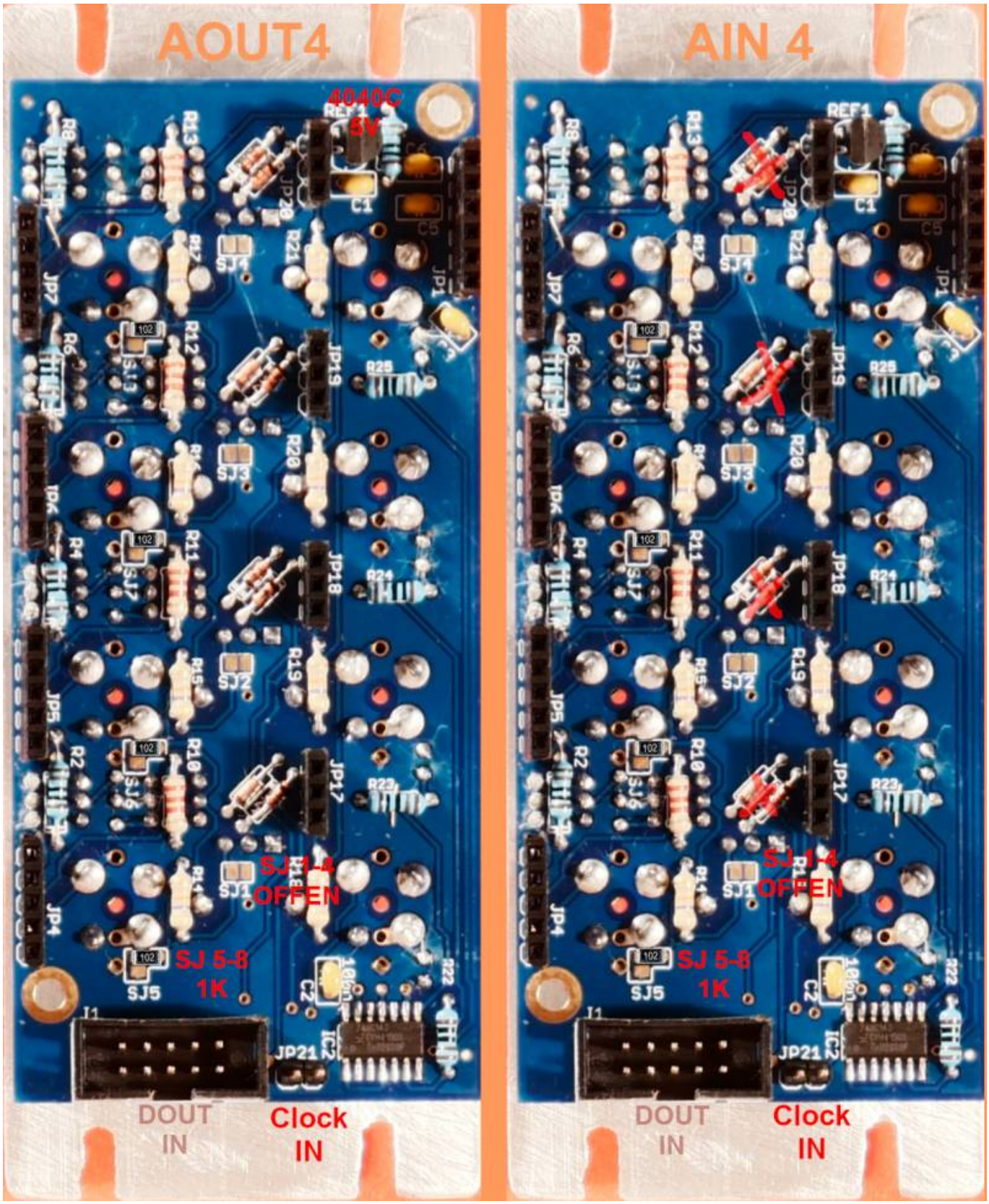

BOM:

RN1: 100k iso 652-4816P-1LF-100K

SJ 1-4: let them unsoldered

SJ 5-8: solder a 1K 0603 SMD Resistor from the Round PAD to 5V- to avoid Floating

Diodes: 1N4148 > only Stuff in AOUT4 Usecases

IC2: 74LV14H (SOIC14)
C2: 100nF Kerko
The Rest: cant remember...Resistors and Caps...

Front-Panel for AIN_4 v1.2

i measeured the PCB, and made a drawing in order to create a hand-drilled Frontpanel... so dont take the values as 100% true...:

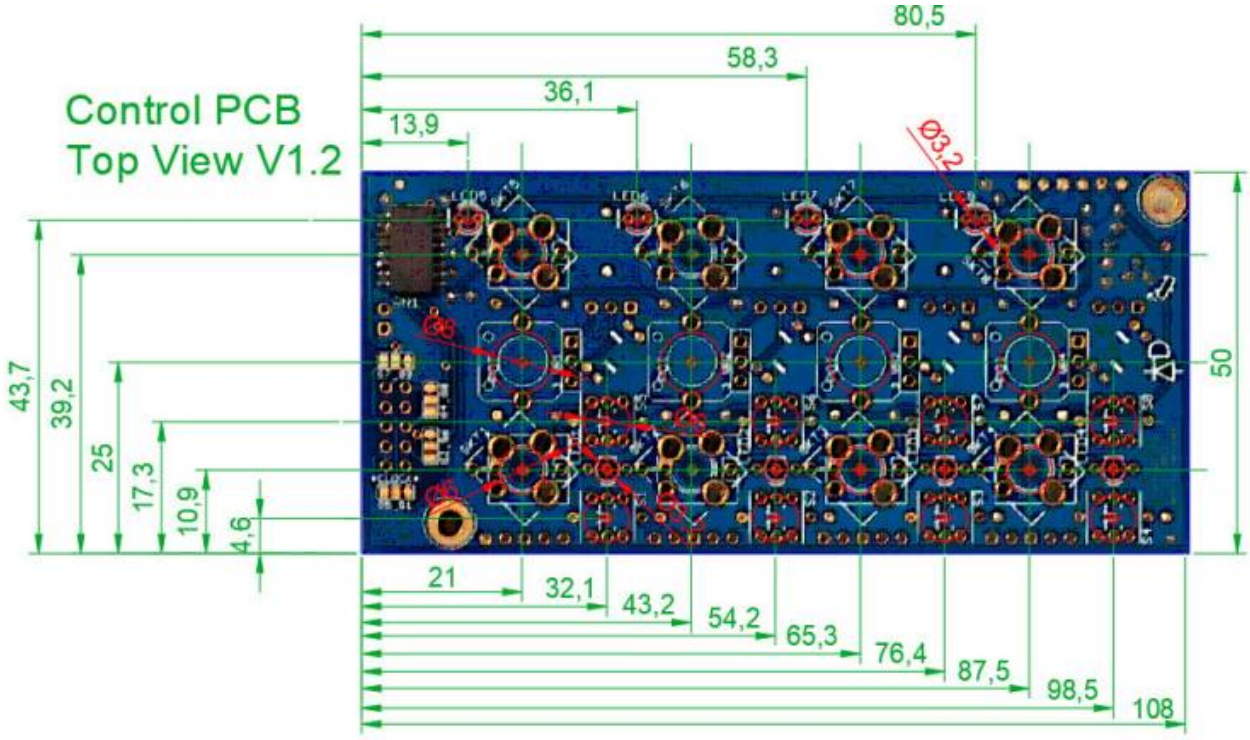

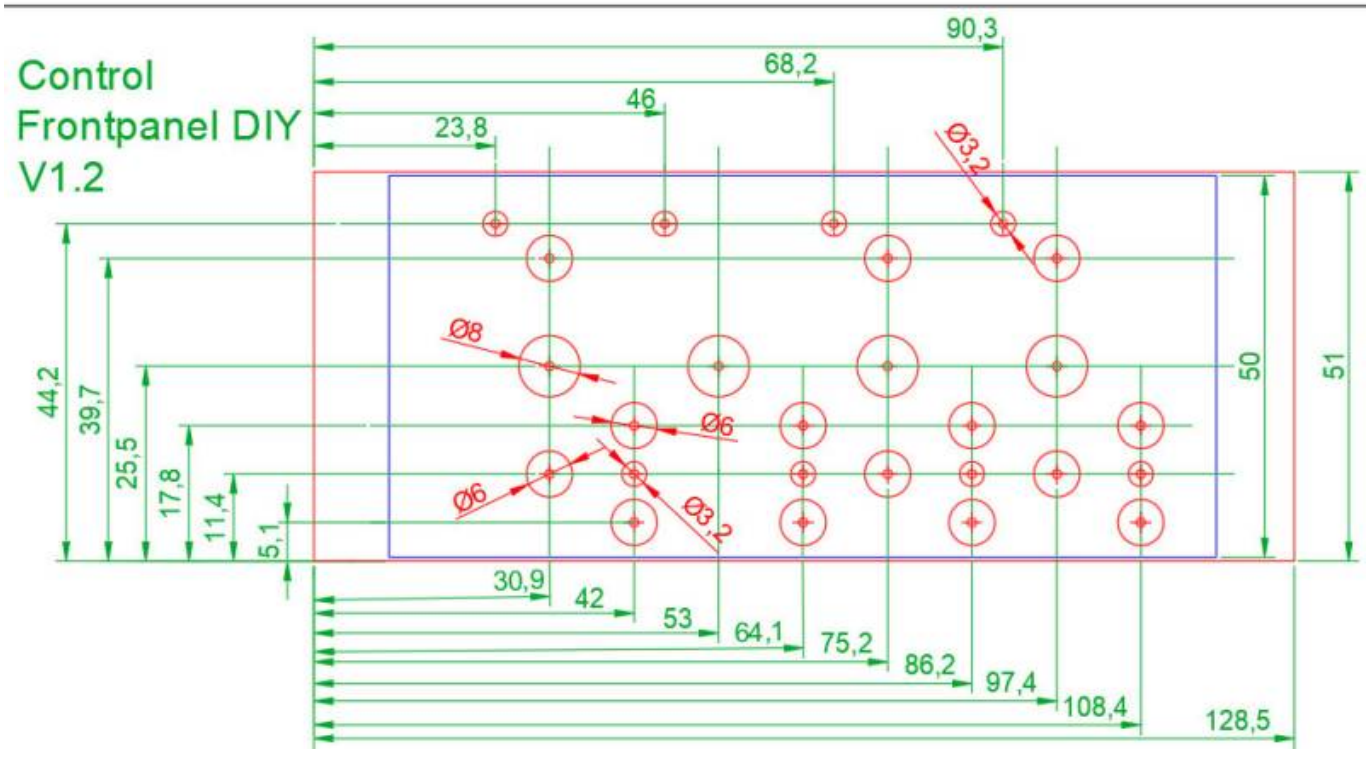



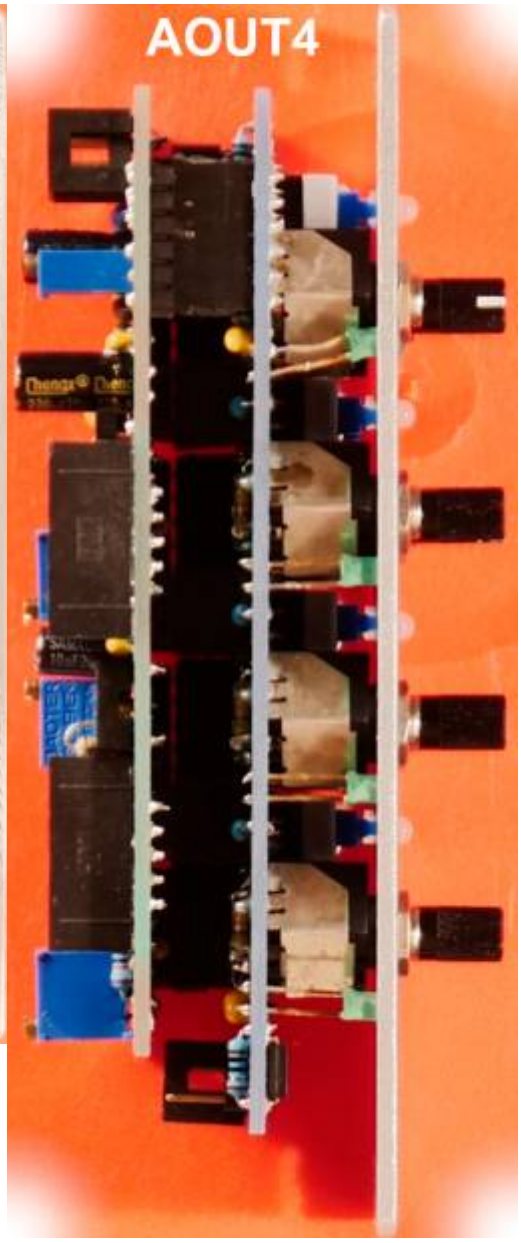

From:
https://wiki.midibox.org/ - **MIDIbox**

Permanent link:
https://wiki.midibox.org/doku.php?id=control_board&rev=1641437065

Last update: **2022/01/06 02:44**