Control Panel AIN_4 & AOUT_4 v1.2

AIN4 - AOUT4 v1.2 TOP

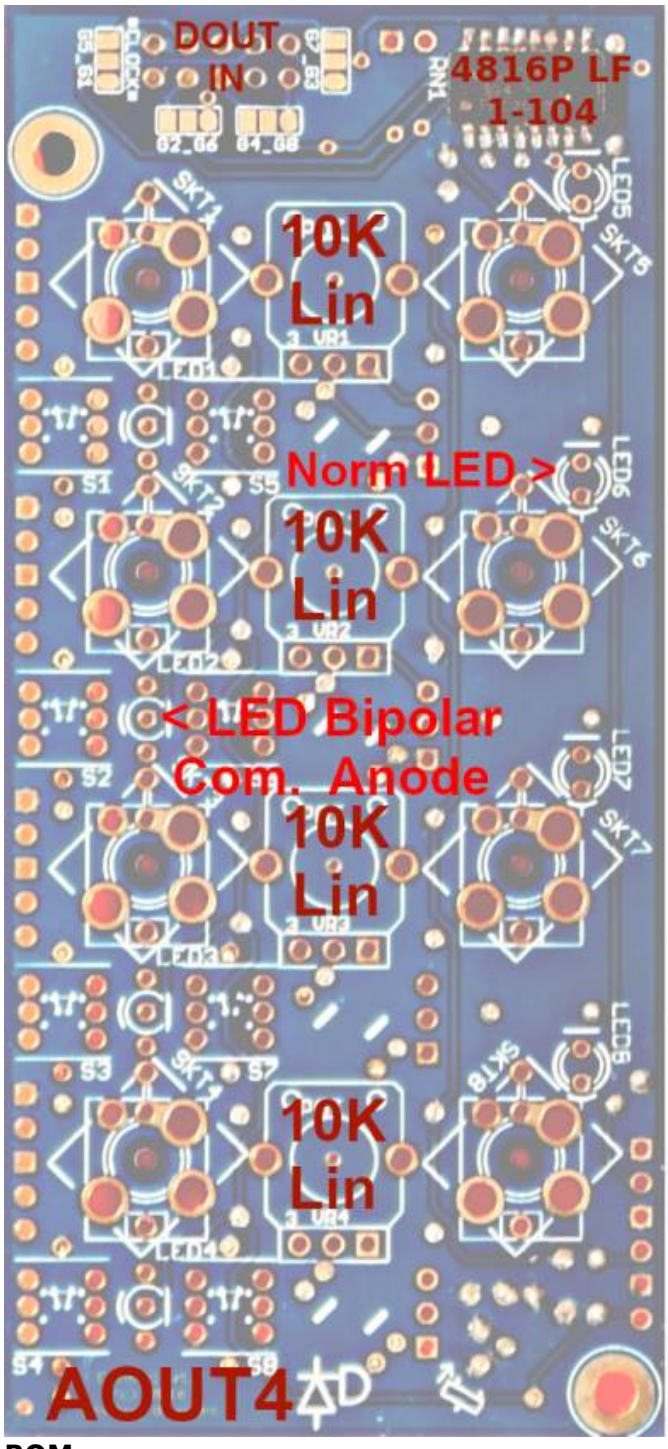

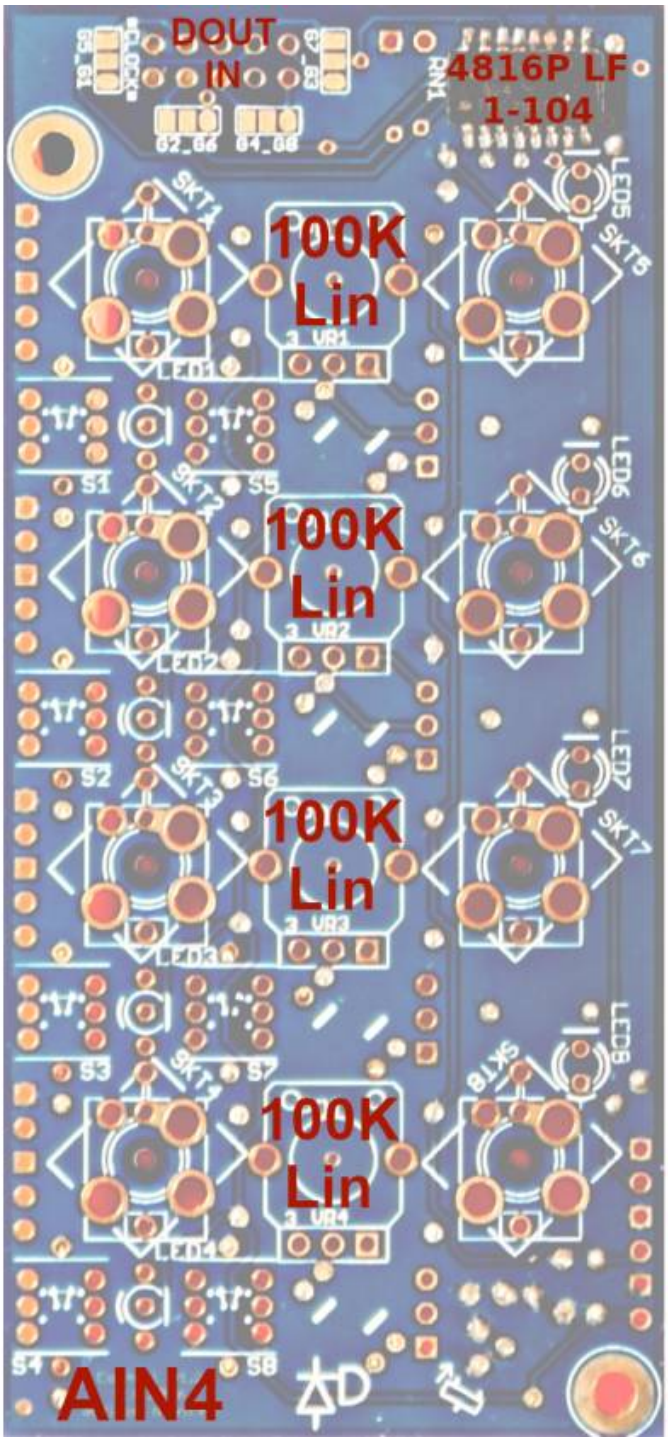

BOM:

8x Switch better take mouser ones...
LED5-8: Normal LEDs
LED1-4: Bipolar LED comman Anode
VR1-4 AOUT4: 10K Lin
VR1-4 AIN4: 100K Lin
SKT1-4: 3,5 Stereo Jack?

JP21: Clock Input(if you have, then dont set G1_G5 on the backside)
J1: Gate/DOUT/Clock - Input - pinout see DOUTx4-Board

AIN_4 v1.2 BACK

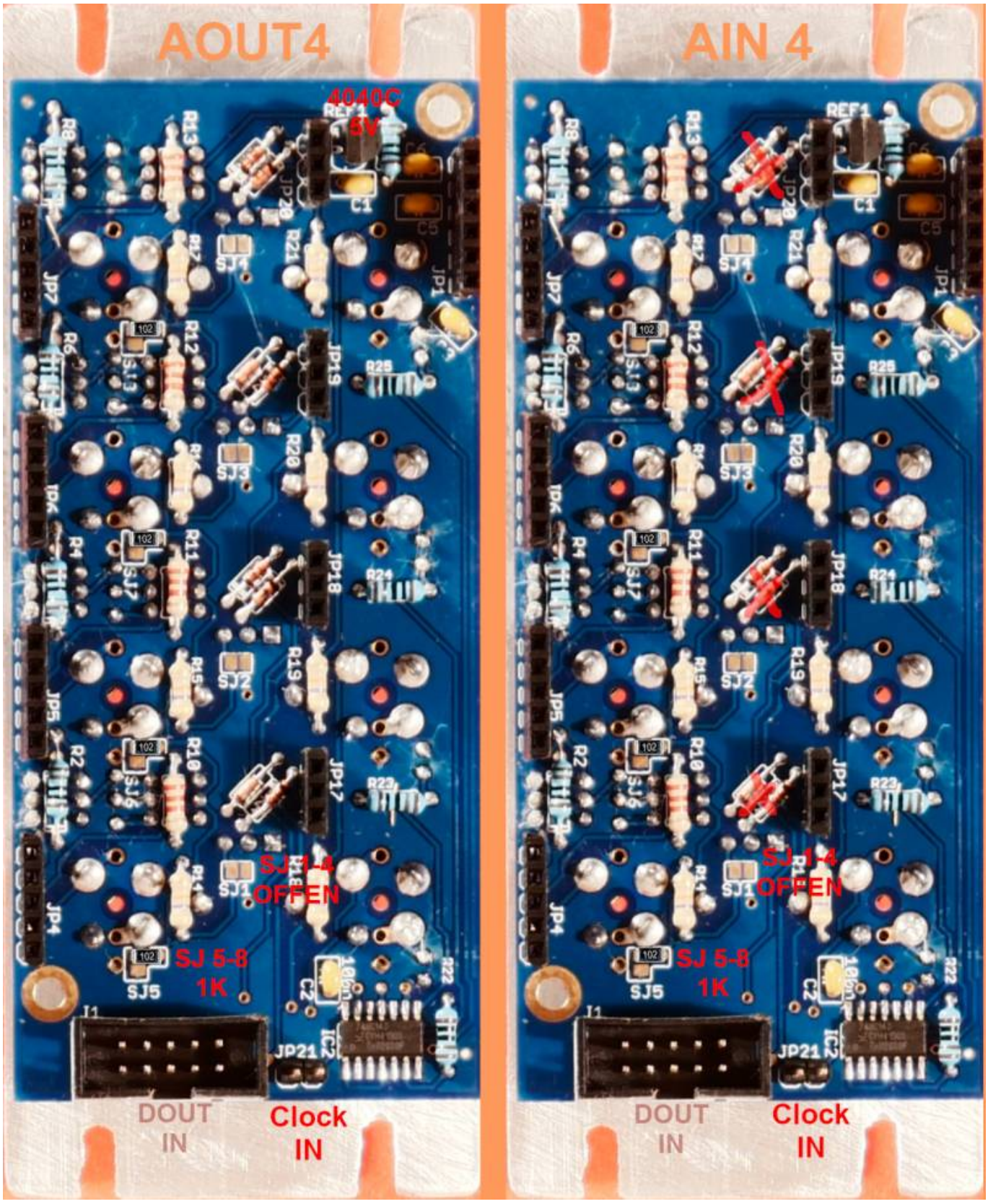

BOM:
RN1: 100k iso 652-4816P-1LF-100K

SJ 1-4: let them unsoldered
SJ 5-8: solder a 1K 0603 SMD Resistor from the Round PAD to 5V- to avoid Floating
Diodes: 1N4148 > only Stuff in AOUT4 Usecases
IC2: 74LV14H (SOIC14)
C2: 100nF Kerko
The Rest: cant remember…Resistors and Caps…

about G5_G1, G2_G6, G4_G8, G7_G3:
J1 you connect to a DOUTx4 output, which deliver 8 DOUTs on 1 shroudet header
But we only use 4 DOUTs on the Controlboards… with this jumpers you decide which one!
IF you use a CLOCK coming from J21, then dont set G1_G5!

Front-Panel for AIN_4 v1.2

i measeured the PCB, and made a drawing in order to create a hand-drilled Frontpanel… so dont take the values as 100% true…:

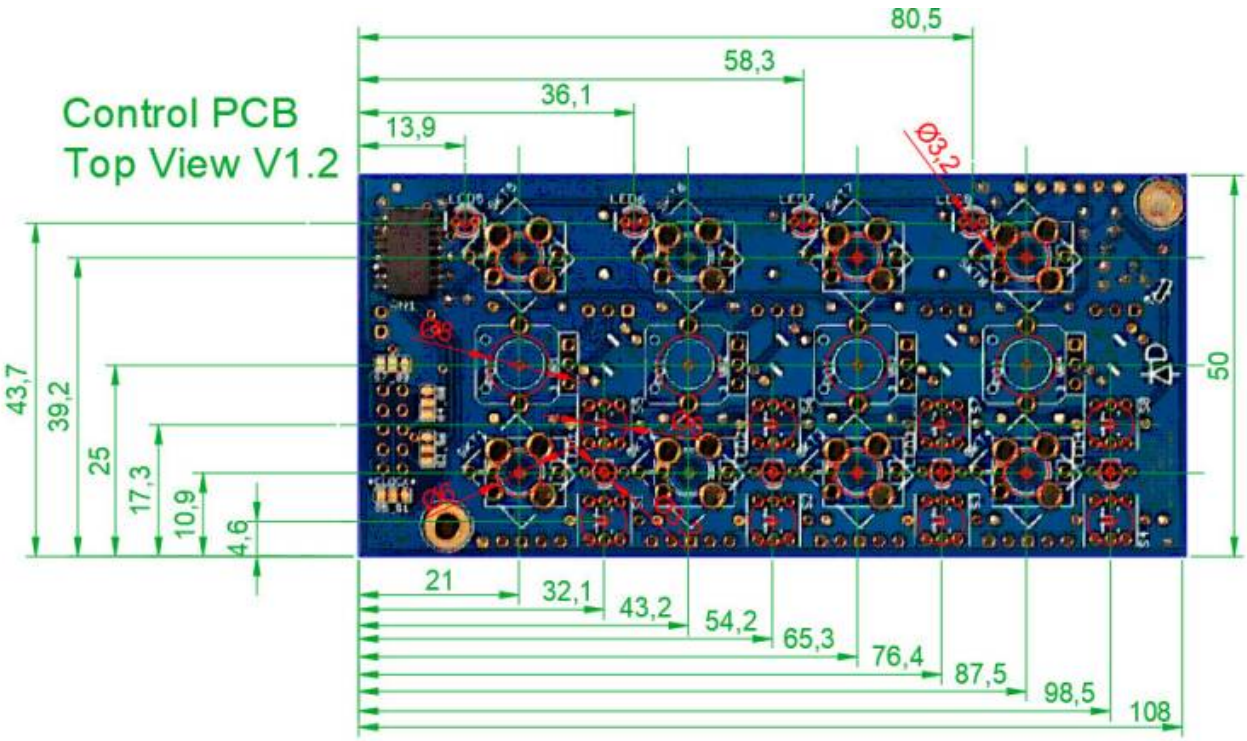
Control PCB
Top View V1.2
80,5
58,3
36,1
13,9
Ø3,2
Ø8
43,7
39,2
25
17,3
10,9
4,6
50
21
32,1
43,2
54,2
65,3
76,4
87,5
98,5
108

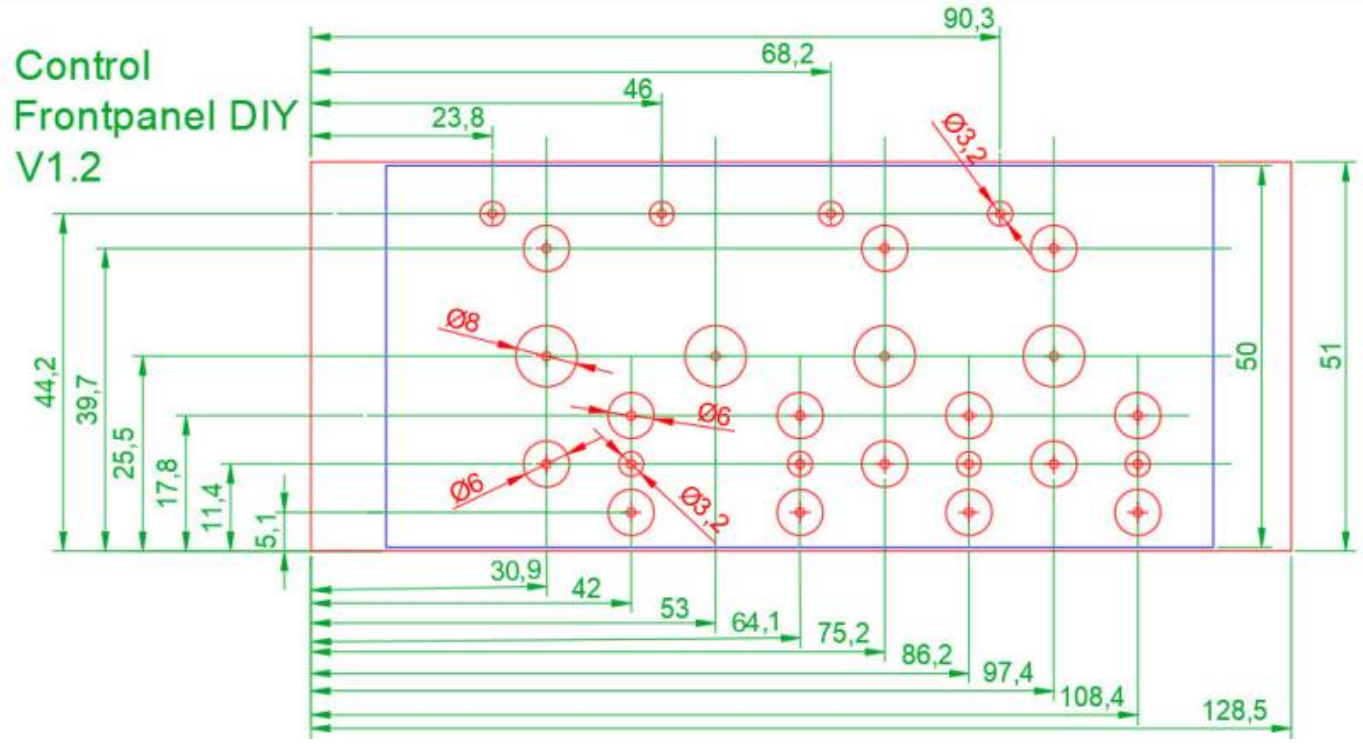
Control
Frontpanel DIY
V1.2
90,3
68,2
46
23,8
Ø3,2
Ø8
Ø6
Ø6
Ø3,2
44,2
39,7
25,5
17,8
11,4
5,1
50
51
30,9
42
53
64,1
75,2
86,2
97,4
108,4
128,5

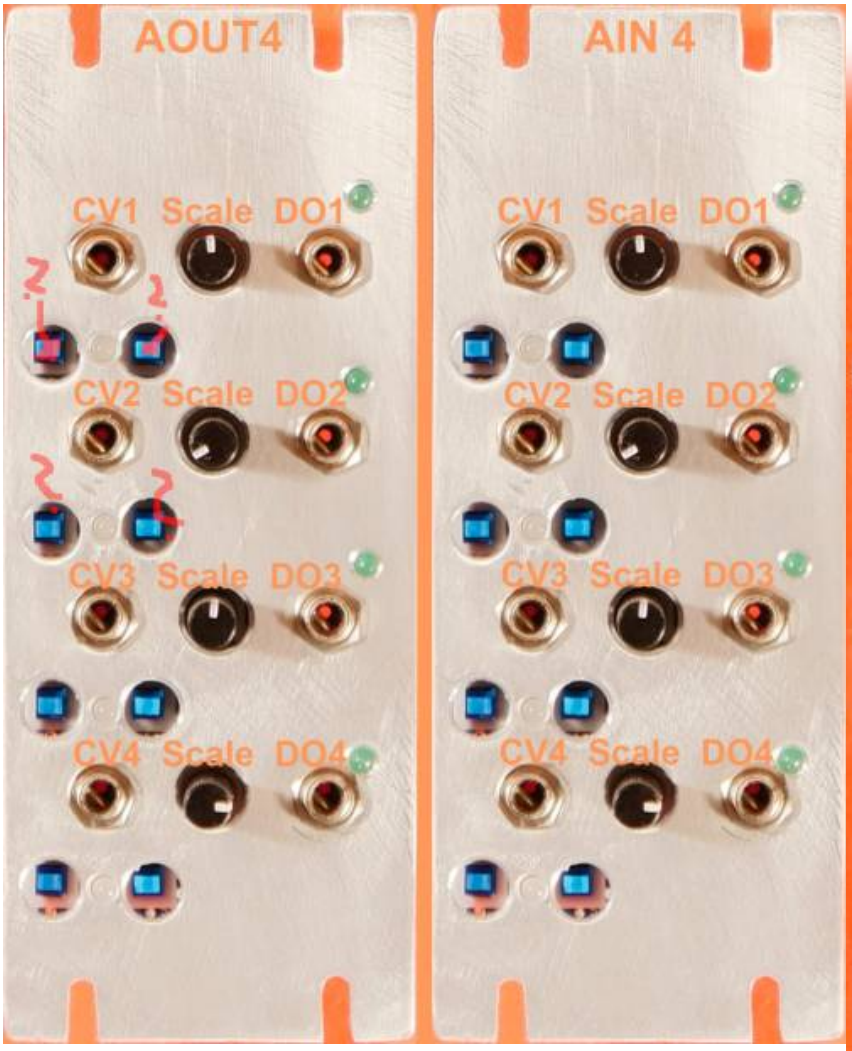

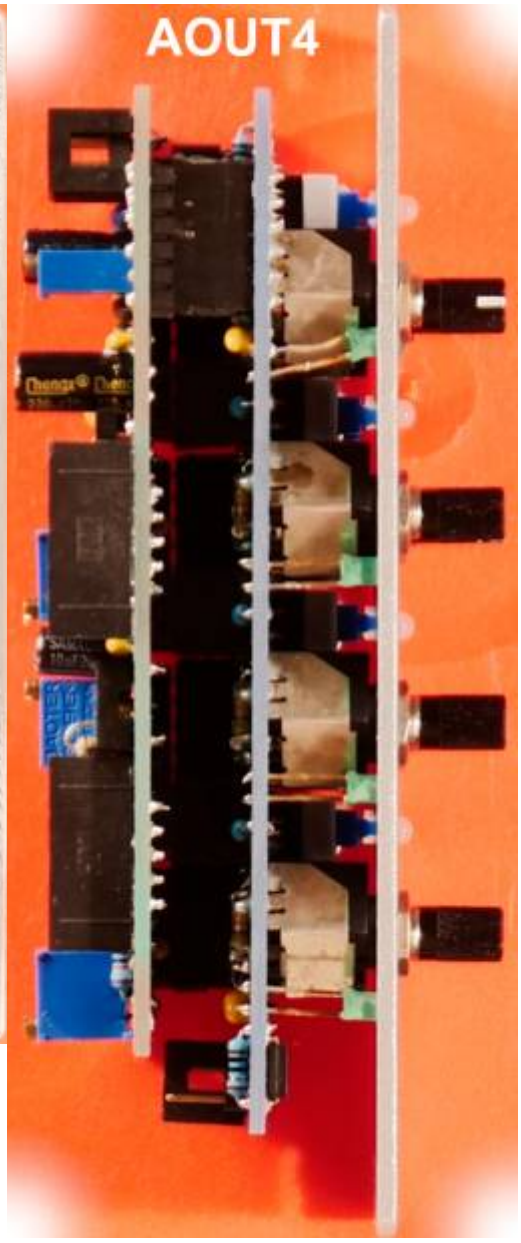

From:
https://wiki.midibox.org/ - **MIDIbox**

Permanent link:
https://wiki.midibox.org/doku.php?id=control_board&rev=1641438012

Last update: **2022/01/06 03:00**