Core4Disc Midi-Expansion

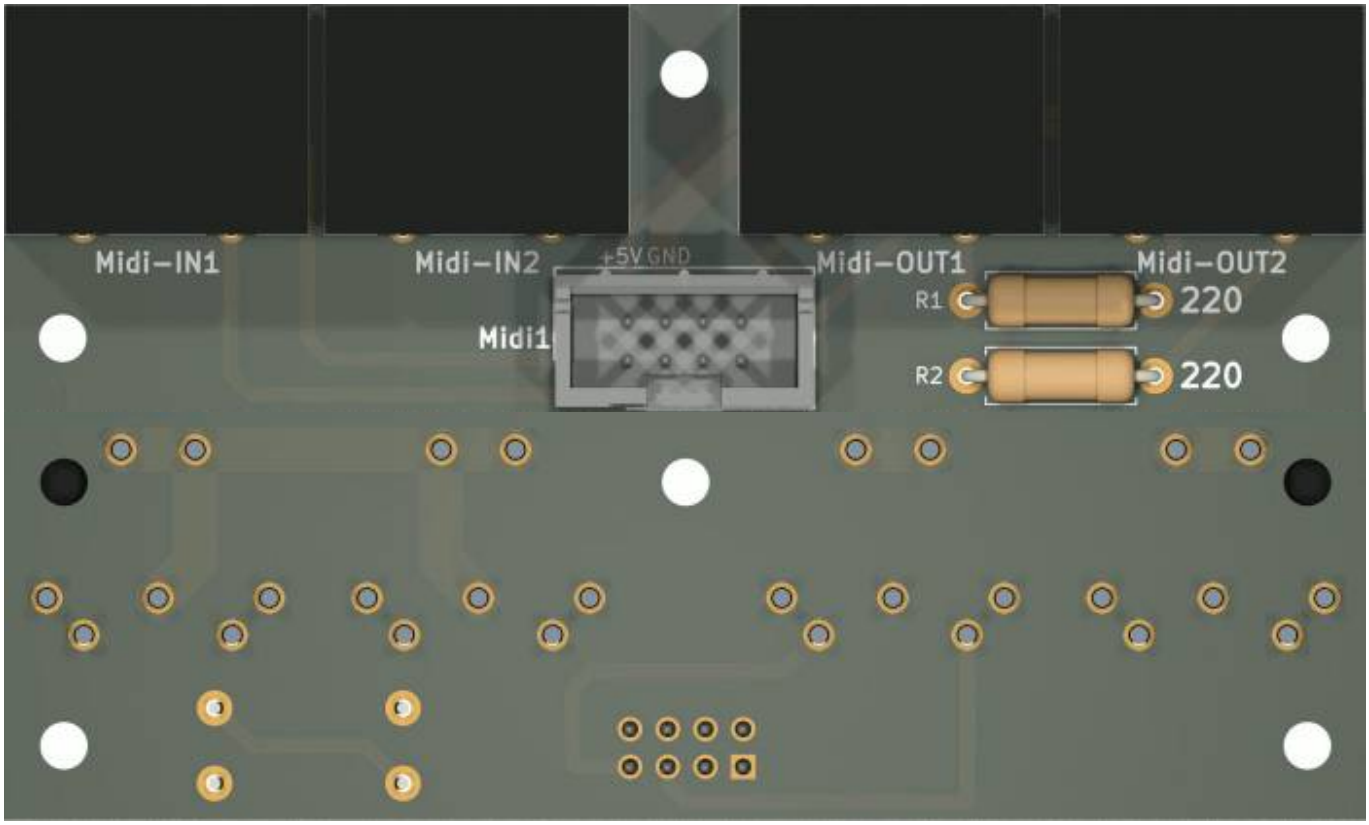

this is one essential part for my triggermatrix5

Shematic

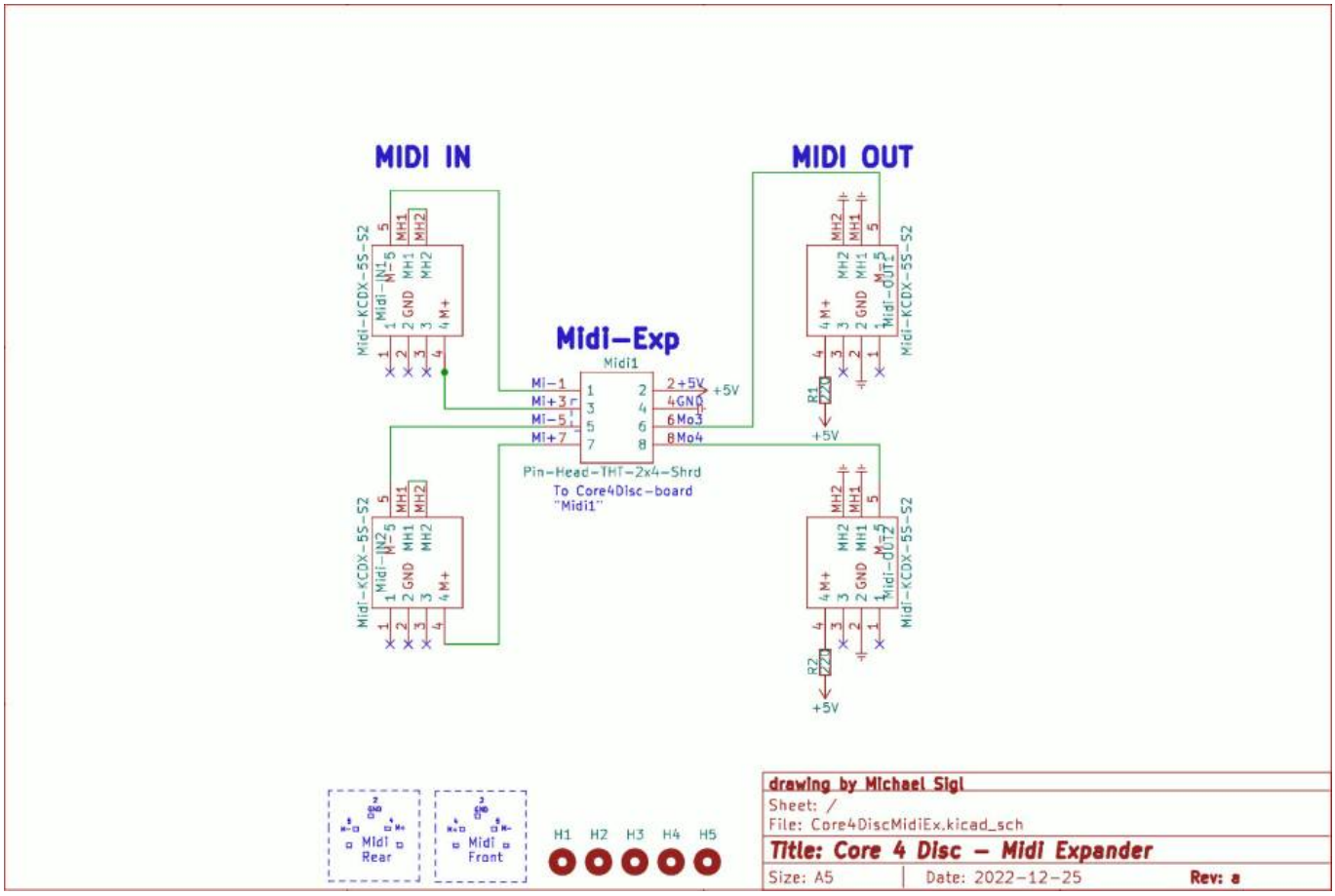

Building and BOM

Handsolder, easy project...

BOM

^Qty ^Designator ^Value ^Footprint ^Mouser^

1	Midi1	Pin-Head-2×4	PinHead-Shrd-2×4-THT	649-75869-232LF
4	Midi-IN1-2, Midi-OUT1-2	Din 5Pole	KCDX5SS2	806-KCDX-5S-S2
2	R1, R2	220	THT or 1206	SMD: 660-RK73B2BTTD221J THT: 281-220-RC

R1 and R2 can be solderd as Thruhole, or SMD1206 Package

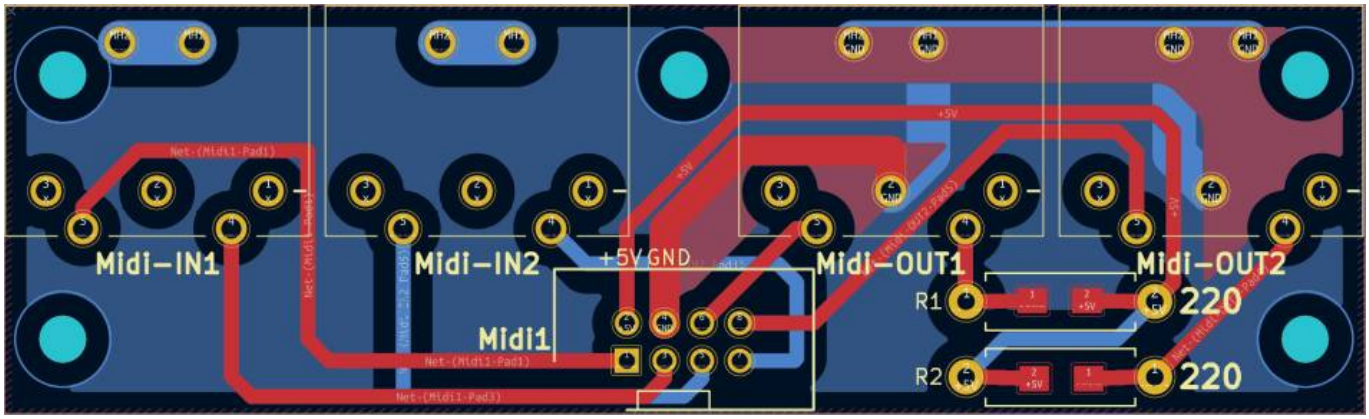

To Do

waiting for Prototype PCB

Community users working on it

- **Phatline** = PCB & Shematic, UI-Programming, Documentation...

Just let a Private message on the forum to user already involved.
or join the forum: Triggermatrix 5

From:
https://wiki.midibox.org/ - **MIDIbox**

Permanent link:
https://wiki.midibox.org/doku.php?id=core4discmidiex&rev=1671987858

Last update: **2022/12/25 17:04**