CV-1

CV-Recorder/Looper & CV-Generator
Control Voltage Recorder, Looper, and Generator - for a own Eurorack-Line... more in Future!



–this picture is the first prototype - pre-Eurorack 😬

Features

* A Envelope which can be Recored from an AIN-Source, it can be Editet on Startpoint,ATK-Playbackrate, Decay-Playbackrate
* LFO which Waveform is stepless morphable from Sine Square Tri Saw-Up to Saw-Down...(only Clocksynced!)
* MSQ MotionSequencer to loop a CV-Signal.
* A Mixer Page which Mixes/Mutes ENV+LFO+MSQ - and scales the output CV
* Copy, Paste, Clear: to Transfair the CV Sequence to other CV1 Instances
* ProgramChange Load and Store on microSD-Card, Load and Store are CC-Commands, so you can remote the device
* The Sequencer can be set to Tact Systems: 3/4 4/4 5/4 7/4 9/4 11/4 13/4

Hardware Requirements

Midibox:

- dipcoref4 - this is the µC Brain for CV1
- no other PCBs needet - but expandable with other Eurorackmodules in Future

- µSD-Card, formated with FAT32
- Soldering Iron - with a Dip that can Handle SMD-Parts, Wires, solder Paste for the µC....
- Eurorack Power Source +-12V AND +5V!

Set

Cabeling

Midi IN1 »> CV1 Remote Device or a Midi-Sequencer

Midi OUT »> to a Global CV1 Remote Device 🔧 Fix Me! - which will need a lot of Midiinputs M16?

- @JMidi1: connect your Sequencer to get Midiclock and Programchanges
- @JAIN1: 2 CV Inputs - 12V tollerant
- @JAUT3: 1 CV Output - (internal DAC with Protection Cirtuit > 12V Tollerant)
- @J19:Get up to 8 CV-Outputs, with a AoutNG
- @JLCD1: up to 4 Additional OLED-Displays for every one a Reset Line - so no additonal Circuit needet
- @J89: DIN and DOUT Shiftregister Chain: thought for decidet Expander Modules (which will come in near future
- @J2/Bootload: If the core is not starting up - because of bad-Firmware, then bridge this Jumper to come into the Bootload-Mode

Software

Firmware

yes it loopin... but not good enough to release anything...

Building

The Design is optimized for Pick and Place most SMD Parts are on the Top-PCB
i ordered 5 PCBs from JLCPCP with almost all SMD Parts (except 10pF µSD and 4x100nF) presoldered

now waiting for Presoldered PCBs 🤣 - for 15€ a Piece!

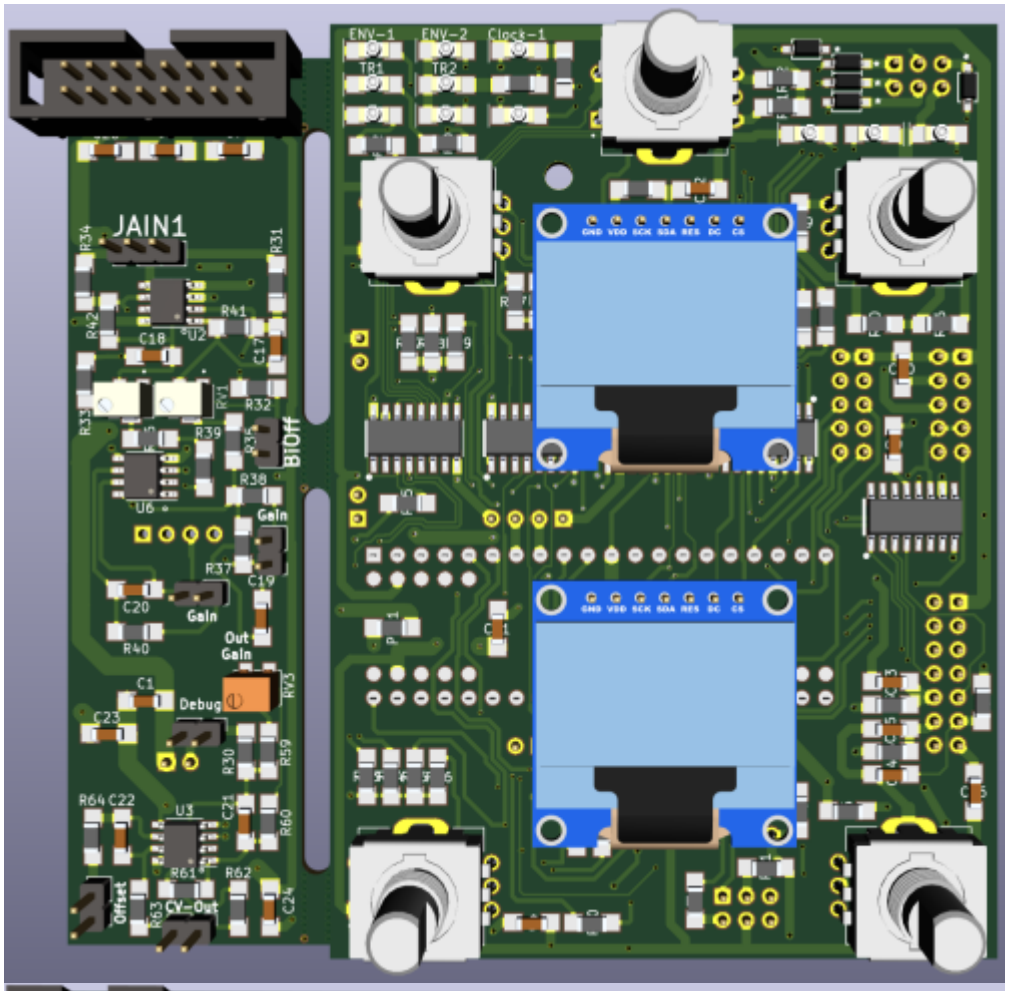
ENV-1
ENV-2
Clock-1
JAIN1
BiOff
Gain
Out Gain
Debug
Offset
CV-Out

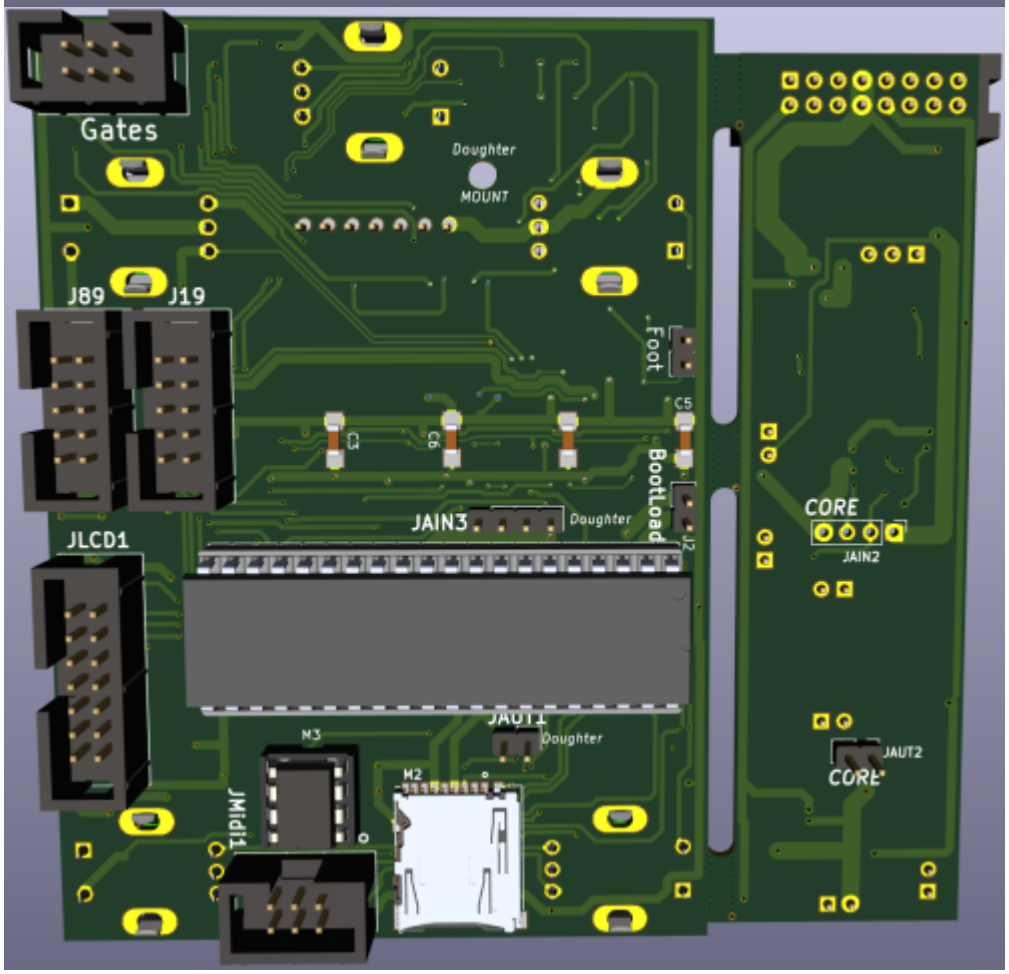
Gates
Doughter
MOUNT
J89
J19
Foot
BootLoad
JAIN3
Doughter
JLCD1
CORE
JAIN2
JAUT1
Doughter
JAUT2
CORE
M3
M2
JMidi1

Frontpanel

Fix Me! - Eurorack Alu-Plate

Case

BOM

Value	Designator	Footprint	LCSC Part Number	Library-Type	Mouser
100nF	C110	1206	C24497	basic	
10uF	C1116,C2325	1206	C13585	basic	
10pF	C17,C18,C19,C20,C21,C22	1206	not avaiable		
1N4148W	D1,D2,D3,D4,D5,D64	SOD123	C81598	basic	
ENC	ENC1-ENC5	ENC-PEC11R			652-PEC11R-4015F-S24
5×2-AOUT	J19	Header-2×5			
BootLoad	J2	Header-1×2			
DinDout	J89	Header-2×5			
HEADER_3	JAIN1	Header-1×3			
Header-1×4	JAIN2	Header-1×4-female			
Header-1×4	JAIN3	Header-1×4			
CV1	JAUT1,JAUT2	Header-1×2			
CV-OUT1	JAUT3	Header-1×2			
BiOff	JG1	Header-1×2			
Gain	JG2,JG3	Header-1×2			
Disconnect	JG4	Header-1×2			
Offset	JG5	Header-1×2			
Foot	JG6	Header-1×2			
Gates	JGate1	Header-2×3			
OLED3-6	JLCD1	Header-2×7			
Midi	JMidi1	Header-2×3			
Header-2×8-eurorack	Jpsu1	Header-2×8			
DIPCOREF4_52P	M1	dipCoreF4_v2c-52p-DIP-40MPNT_CORE_52P			Antichambre
uSD_DM3ATDM3AT	M2	uSD-DM3AT-SF-PEJM5			798-DM3AT-SF-PEJM5
6N138	M3	DIP-8			512-6N138M
LED-Green	Menue-1,TR1,Clock-1,ENV-1,Menue-2,TR2,ENV-2,Menue-3,Menue-4,Menue-5,Menue-6	1206-LED	C559120	extended	
OLED	OLED1,OLED2	SSD1306:OLED-SSD1306-128×64			
PTC	PTC1	1206	C126818	extended	
10K	R28,R29,R43-R58	1206	C17902	basic	
49K9	R30-R40,R61-R64	1206	C18017	extended	
30K	R41,R42	1206	C17999	extended	
130K	R59	1206	C17893	extended	
100K	R60	1206	C17900	basic	
1K	R1-R7	1206	C4410	basic	
4K7	R8	1206	C17936	basic	
220	R9-R27,R63	1206	C17958	basic	
Trim-3224W-1-104E	RV1,RV2	Trimmer-3224W-1	C53229	extended	
Trim-3214W-1-253E	RV3	Trimmer-3214W_Vertical			652-3214W-1-253E
74HC595	S1-S3	SOP-16_SOIC-16	C5947	basic	
74HC165	S4,S5	SOP-16_SOIC-16	C5613	basic	
TL072	U2,U3	SOP-8_SOIC-8	C6961	basic	
MCP6002	U6	SOP-8_SOIC-8	C7377	basic	

Shematic

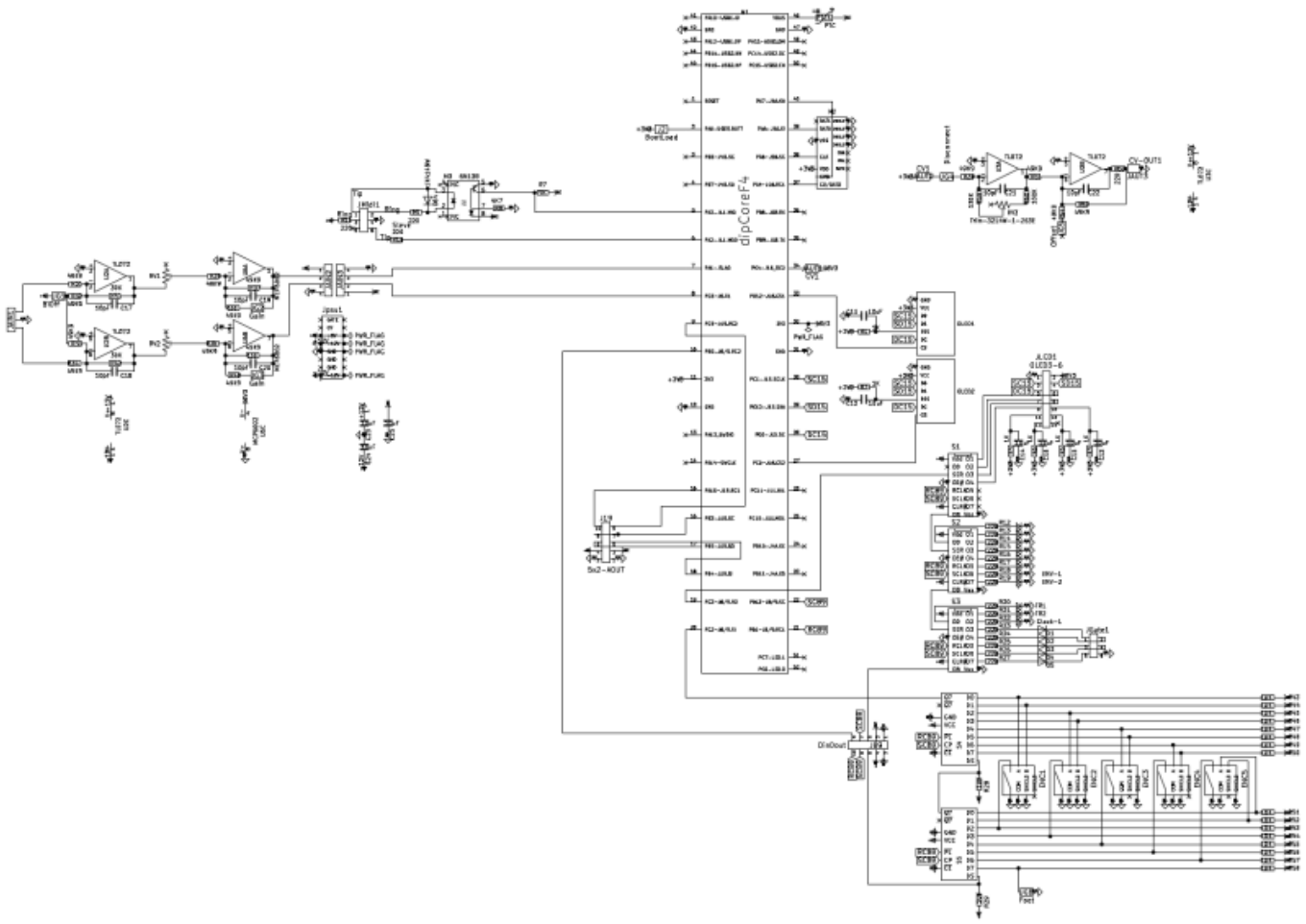

To Do

a housing/case or frontplate

Resources

Community users working on it

- **Phatline** = Programming, Documentation...

Just let a Private message on the forum to user already involved.
I have ProtoBoards here - i test one, and if it works, i can share them for Beta Testing-if you pay the postage

From:
https://wiki.midibox.org/ - **MIDIbox**

Permanent link:
https://wiki.midibox.org/doku.php?id=cv1&rev=1609791999

Last update: **2021/01/04 20:26**