Fix Me! *Update thing out there*

A place to catalogue analogue drum experiments, clonings, mods, hacks, bends, MIDIbox integration, specialised drum sequencers, MBSEQ firmware, SID as drum machine, triggering, E-Drum heads etc etc etc.

Related pages on this wiki and ucapps.de :

Midibox 606re - a re-edit of TR-606 CYM/HH/BD/SD parts

MIDIBox SEQ v2 - a simple control surface can be built with 16 LEDs/switches and one encoder (according to the SEQ Drum Mode tutorial below), and still have full access to this amazing sequencer engine. Up to 48 seperate MIDI drum note assignments x 16 steps.

Can also take an AOUT module for up to four CVs outs. The DOUTx4 expansion mentioned under MIDIO128 below could possibly be coded in.

With added code, a LED matrix to display all drum patterns simultanously may also be possible, as in the Simmons SDS6. Moxi has already implemented a 4×16 button/LED matrix, and TK has indicated up 1024 may be possible (in MIOS, not necessarily in the SEQ). 4x16 LED matrix wiring - **PDF**. Also see the Sparkfun parts listed below.

MIDIO128 - up to 128 on/off signals and 128 input switches from one core. Useful for a simple fixed velocity MIDI to trigger/gate converter, sequenced from other equipment or software. A user adaption has added a DOUTx4 module for another 32 fixed velocity trigger outs.

MIDIBox CV - 8 gates and 2 analog CVs per AOUT module. Could be adapted for velocity triggers?

TR Sequencer - Discussion on the classic Roland TR-x0x drum sequencer user interface

DSEQ32 - mess's 32 step 8 track drum sequencer

MIOS Downloads - Code examples for:
* 8 CV outputs with the MBHP_AOUT module
* button matrix of 8×8 = 64
* 64 CV INs and OUTs
* 64 pots, 128 buttons, 128 LEDs
* velocity buttons (e.g. for drumpads)
* MIDIBox SID - steal matrix code
* MIDIBox SEQ

Forum topics:

MIDIBox SEQ Drum Mode
MIDIBoxSID as drum machine - sounds like this!
Analog drum modules - cloning and triggering them - the thread that started it all
Moogah's 808/909 clone
Beginner's 16 step SEQ project
Alternative sequencer firmware

MB SEQ with button matrix?
SEQ with 4x16 buttons and LEDs
16x16 button matrix
4x16 LED/button matrix
using scan matrix together with led matrix? - Success!
MB-SEQ LED-Matrix in Firmware aktivieren - auf Deutch or in Google English
Diode matrix input - large matrix with MIDIO128
80 LEDs from one CORE

Other resources

V-Trig, S-Trig and Gate - from Wikipedia
Gates and Triggers, Mystery Solved - from synthesizers.com
PIC MIDI programming - getting started
VC LFO and ADSR on PIC 16s - cloning analogue LFO and ADSR with PICs.

Drum pads and EDrums

A good piezo pad design
EDrum For Free - great DIY site, heaps of designs for pads, triggers, pedals, hats etc

Yahoo Groups

TR-707 - Service manual, schematics, mods: you'll need to join to access files.
Drummachine - moderator approval to join
Roland Drum Machines
rolandtr505
Simmons_Drums - schematics and service manuals galore
Circuit Bending - just a list of search results

Useful Parts

RGB Matrix

Sparkfun Electronics have an 8x8 RGB LED Matrix with an SPI serial controller attached for $59.95. Red/Green version $34.95, matrix only small $4.95 large $29.95.
The serial controller backpack contains a reprogrammable AVR ATMega8 microcontroller, which bumps up the value equation and opens a world of possibilities, such as LED sensors.

4×4 lighted key matrix

According to this forum thread, Sparkfun will also soon be offering “silicone illuminated buttons … 4×4 arrays that will cost between $20 and $30 U.S … with 5mm holes for our tri-color LEDs.”

High power shift register

Shift register 8 bit high power - serial in, 8 pins out at up to 50V/150mA each. $1.95. Sparkfun again :)
This would be handy for triggering modules that expect more than +5V as from a DOUT.

Schematics:

S-Trig to V-Trig converter - also see below. 505/707 internal triggers are S-Trig.
V-Trig to S-Trig converter - different one below
Simple switch/trigger with transistors - ground switch with NPN or +ve pulse with PNP. The example given uses a PC parallel port and the BendControl Win95 sequencer
Arista Drum machine
SynthOllie's scans - Boss PC-2 Percussion with noise generator mod, Boss handclap, Casio VL-1, clap, synbal, synclap, syntom II.
Matrixsynth blog entry - where I got the link to synthollie and also a SynTom II and Cymbal II Zip file.
Papareil Synth Labs - Coron Drum Synth clone schematics, also lots of other FX and synth modules, MIDI projects, etc.

Roland TR-505 8x trigger out mod

```
R80 - Kick
R75 - Snare
R2  - Clap/Rim
R69 - Cowbell
R68 - Conga
R63 - Hats
R62 - Ride/Crash
R60 - Toms
```

S-Trig to V-Trig converter

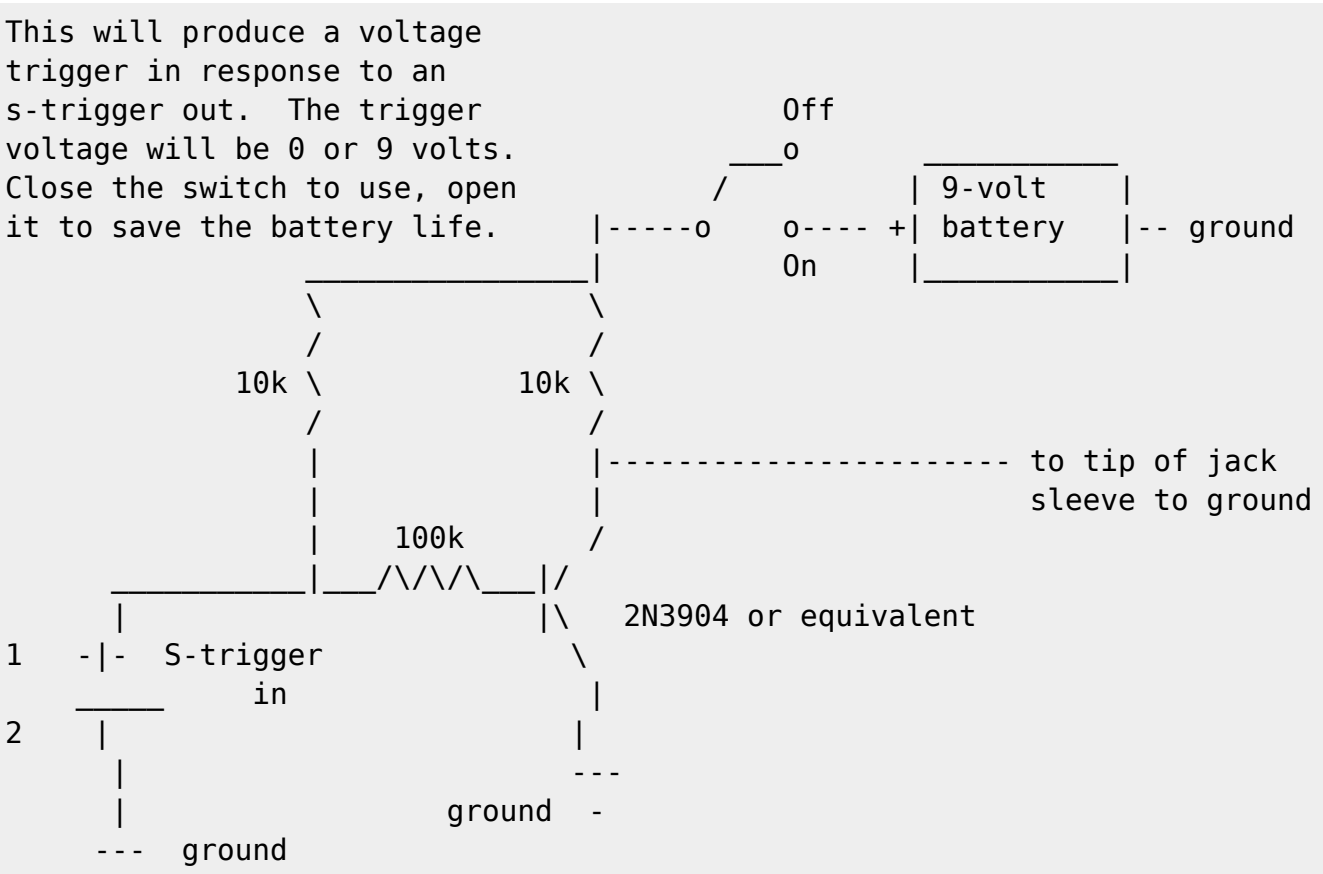

V-Trig to S-Trig (another)

```
The circuit that I have is very simple. One VMOS FET (something like the
VN10KM). No power, nothing...

it's something like:


                      S|-----------------o S-Trig
                       ---
                   G |   |
       trig o--------|   |
                     |___|
 V-Trig.               | D
                       |
        gnd o-----------------------------o gnd


where G, S, and D stand for Gate, Source and Drain - and I may have them
mixed up, coz I'm doing this from a bad memory)
```

To do:

* MBFM drums (duh)
* Jamaroonies
* 505/707 as trigger source
* LED matrix

From:
https://wiki.midibox.org/ - **MIDIbox**

Permanent link:
https://wiki.midibox.org/doku.php?id=drumstuff&rev=1465576494

Last update: **2016/06/10 16:34**