Eagle3D MIDIBox User Pack

Eagle3D from Matthias Weißer http://www.matwei.de/doku.php

New parts tutorial from Félix Chénier
http://felixchenier.homelinux.com/doku.php?id=pcb:eagle3dnewpart

3dusrpac.dat

Just copy the code below to your 3dusrpac.dat and user.inc.

known packages (not assigned in the 3dpack.dat):

```
HEADER1X2:0:0:0:0:0:0:0:0:0:0:0:0:0:0:-90:0:0:0:0:0:0:0:0:0:0:0:0:0:0:0:PH_1
X2(:Stiftleiste 2,54mm Raster 2Pin 1Reihe (pinhead.lib):Header 2,54mm Grid
2Pin 1Row (jumper.lib)
HEADER1X3:0:0:0:0:0:0:0:0:0:0:0:0:0:0:-90:0:0:0:0:0:0:0:0:0:0:0:0:0:0:0:PH_1
X3(:Stiftleiste 2,54mm Raster 3Pin 1Reihe (pinhead.lib):Header 2,54mm Grid
3Pin 1Row (jumper.lib)
HEADER1X4:0:0:0:0:0:0:0:0:0:0:0:0:0:0:0:0:0:0:0:0:0:0:0:0:0:0:0:0:0:0:PH_1X4
(:Stiftleiste 2,54mm Raster 4Pin 1Reihe (pinhead.lib):Header 2,54mm Grid
4Pin 1Row (jumper.lib)
HEADER2X5-
NO:0:0:0:0:0:0:0:0:0:0:0:0:0:0:-90:0:0:0:0:0:0:0:0:0:0:0:0:0:0:0:PH_2X5(:Sti
ftleiste 2,54mm Raster 5Pin 2Reihen (pinhead.lib):Header 2,54mm Grid 5Pin
2Row (jumper.lib)
HEADER2X5:0:0:0:0:0:0:0:0:0:0:0:0:0:0:-90:0:0:0:0:0:0:0:0:0:0:0:0:0:0:0:CON_
DIS_WS10G(:Wannenstecker 10Pin:Shrouded Header 10Pin
HEADER2X8:0:0:0:0:0:0:0:0:0:0:0:0:0:0:-90:0:0:0:0:0:0:0:0:0:0:0:0:0:0:0:CON_
DIS_WS16G(:Wannenstecker 16Pin:Shrouded Header 16Pin
HEADER2X10:0:0:0:0:0:0:0:0:0:0:0:0:0:0:-90:0:0:0:0:0:0:0:0:0:0:0:0:0:0:0:CON
_DIS_WS20G(:Wannenstecker 20Pin:Shrouded Header 20Pin
CA6V:0:1:0:0:0:0:0:0:0:0:0:0:0:0:0:0:0:0:0:0:0:0:0:0:0:0:0:0:0:0:RES_DIS_TRI
M_PT10_H_10(:PT10:PT10
```

new packages:

```
DT6:0:0:0:0:0:0:0:0:0:0:0:0:0:0:0:0:0:0:0:0:0:0:0:0:0:0:0:0:0:0:USER_DT6(:Ta
ster Switch-MISC:Tactile Switch-MISC
STEC16:0:0:0:0:0:0:0:0:0:0:0:0:0:0:0:0:0:0:0:0:0:0:0:0:0:0:0:0:0:0:USER_STEC
16(:STEC16 Encoder:STEC16 Encoder
3310LCD:0:0:0:0:0:0:0:0:0:0:0:0:0:0:0:0:0:0:0:0:0:0:0:0:0:0:0:0:0:0:USER_331
0LCD(:3310LCD Midibox:3310LCD Midibox
LED_RING:0:0:0:0:0:0:0:0:0:0:0:0:0:0:0:0:0:0:0:0:0:0:0:0:0:0:0:0:0:0:USER_LE
```

```
D_RING(:
```

user.inc

DT6

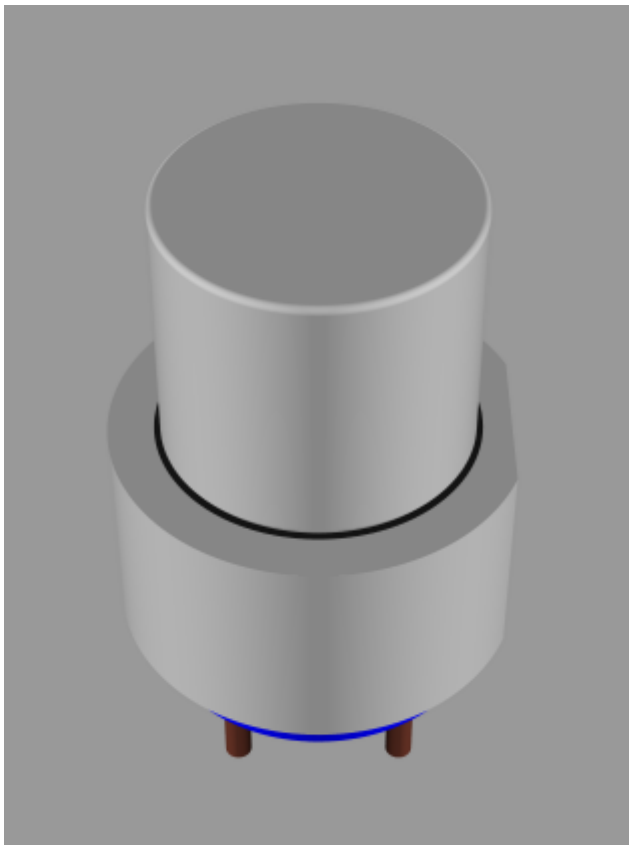

```
/*****************************************************************************
*************************************************************
//DT6
//Created from Jack(forum.midibox.org) on 16-Jan-2006
//
*****************************************************************************
*************************************************************/
#macro USER_DT6()
union{
//DT6
  union{
  //button cover pushed
          difference {
                  cylinder { <0, 0, 1.3>, <0, 0, 7.2>, 6.0 }
                  union{
                          box { <5.5, -6, 1.2>, <7, 6, 7.3> }
                          difference {
                                  cylinder { <0, 0, 0>, <0, 0, 5.6>, 5.1 }
                                  box { <4.4, -5.2, -0.1>, <7, 5.2, 5.7> }
```

```
                        }
                }
        }

  //button cover released
        cylinder { <0, 0, 7.2>, <0, 0, 14.0>, 4.5 }
        cylinder { <0, 0, 7.2>, <0, 0, 14.2>, 4.3 }
        union{
                torus { 4.3, 0.2 }
                rotate <90, 0, 0>
                translate <0, 0, 14.0>
        }

        texture { pigment { color Grey } }
        //translate <0, 0, -1.3>        //clicked
  }

  //button body
  difference {
                cylinder { <0, 0, 0>, <0, 0, 5.6>, 5.1 texture { pigment {
color Blue }}}
                box { <4.4, -5.2, -0.1>, <7, 5.2, 5.7> }
  }

  //pins
  cylinder { <2.5, 2.5, -3.2>, <2.5, 2.5, 5.6>, 0.4 texture { pigment {
P_Copper1 }}}
  cylinder { <2.5, -2.5, -3.2>, <2.5, -2.5, 5.6>, 0.4 texture { pigment {
P_Copper1 }}}
  cylinder { <-2.5, 2.5, -3.2>, <-2.5, 2.5, 5.6>, 0.4 texture { pigment {
P_Copper1 }}}
  cylinder { <-2.5, -2.5, -3.2>, <-2.5, -2.5, 5.6>, 0.4 texture { pigment {
P_Copper1 }}}
}
rotate<-90,180,0> //correction
#end
```

ALPS STEC16B03-04

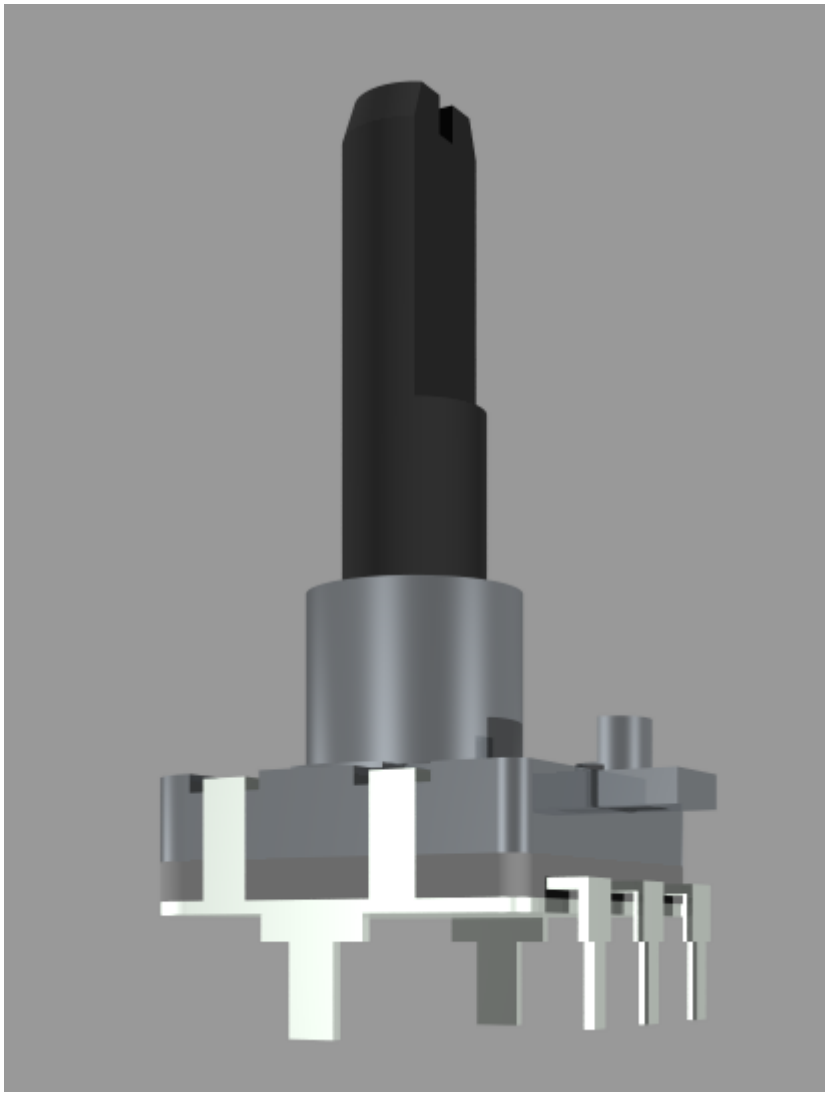

```
/*****************************************************************************
*************************************************************
//ALPS STEC16B03-04
//Created from Jack(forum.midibox.org) on 16-Jan-2006
//
*****************************************************************************
*************************************************************/
#macro USER_STEC16()
union{

        #declare L1 = 26;
        #declare LB = 7;
        #declare l1 = 12;
        #declare X1 = 16/2;
        #declare Y1 = 8.3;
        #declare Y2 = 9;
        #declare M9 = 4.5;
        #declare R6 = 3;
        #declare h2 = 0.5;
        #declare h3 = 1.5;
        #declare h4 = 3.2;
```

```
        #declare H = 6.5;
        #declare H1 = 1;
        #declare H2 = H1 + h2;
        #declare H3 = H2 + h3;
        #declare H4 = H3 + h4;

       difference{
                union{
                        difference{

                                union{

                                        box { <-X1, -Y2, H3>, <X1, Y1, H4>
texture { T_Chrome_2B } }
                                        box { <-X1, -Y2, H2>, <X1, Y1, H3>
pigment { Gray60 }}
                                        box { <-X1, -Y2, H1>, <X1, Y1, H2>
texture { T_Silver_5A }}


                                        cylinder { <0, 0, H4>, <0, 0, H>,
6.25 texture { T_Chrome_2B }}

                                        box { <-2, -(Y2+3.5), H-0.35>, <2, -
Y2, H-1.65> texture { T_Chrome_2B }}
                                        cylinder { <0, -Y2, H-0.35>, <0, -
Y2, H+1.65>, 1.5 texture { T_Chrome_2B }}
                                }

                                union{
                                        box { <X1-2.5, Y1-2.5, 0>, <X1+0.1,
Y1+0.1, H> }
                                        box { <-(X1-2.5), Y1-2.5, 0>, <-
(X1+0.1), Y1+0.1, H> }

                                        box { <X1-1, -(Y2-1), 0>, <X1+0.1, -
(Y2+0.1), H> }
                                        box { <-(X1-1), -(Y2-1), 0>, <-
(X1+0.1), -(Y2+0.1), H> }



                                        box { <3.1, -Y2, H>, <-3.1, -
(Y2-1.6), H+2.1> texture { T_Chrome_2B }}
                                }

                        }

                        union{
                                cylinder { <X1-2.5, Y1-2.5, H3>,    <X1-2.5,
Y1-2.5, H4>,    2.5 texture { T_Chrome_2B }}
```

```
                                cylinder { <X1-2.5, Y1-2.5, H2>,    <X1-2.5,
Y1-2.5, H3>,    2.5 pigment { Gray60 }}
                                cylinder { <X1-2.5, Y1-2.5, H1>,    <X1-2.5,
Y1-2.5, H2>,    2.5 texture { T_Silver_5A }}

                                cylinder { <-(X1-2.5), Y1-2.5, H3>, <-
(X1-2.5), Y1-2.5, H4>, 2.5 texture { T_Chrome_2B }}
                                cylinder { <-(X1-2.5), Y1-2.5, H2>, <-
(X1-2.5), Y1-2.5, H3>, 2.5 pigment { Gray60 }}
                                cylinder { <-(X1-2.5), Y1-2.5, H1>, <-
(X1-2.5), Y1-2.5, H2>, 2.5 texture { T_Silver_5A }}

                                cylinder { <X1-1, -(Y2-1), H3>,    <X1-1, -
(Y2-1), H4>,    1 texture { T_Chrome_2B }}
                                cylinder { <X1-1, -(Y2-1), H2>,    <X1-1, -
(Y2-1), H3>,    1 pigment { Gray60 }}
                                cylinder { <X1-1, -(Y2-1), H1>,    <X1-1, -
(Y2-1), H2>,    1 texture { T_Silver_5A }}

                                cylinder { <-(X1-1), -(Y2-1), H3>, <-(X1-1),
-(Y2-1), H4>, 1 texture { T_Chrome_2B }}
                                cylinder { <-(X1-1), -(Y2-1), H2>, <-(X1-1),
-(Y2-1), H3>, 1 pigment { Gray60 }}
                                cylinder { <-(X1-1), -(Y2-1), H1>, <-(X1-1),
-(Y2-1), H2>, 1 texture { T_Silver_5A }}
                                }
                }
                union{
                        box { <X1-3.75, Y1-2.7, H+0.1>, <X1+0.1, Y1-6, 5.5>
texture { T_Chrome_2B }}
                        box { <X1-0.5, Y1-3.35, H+0.1>, <X1+0.1, Y1-5.35,
-0.5>              texture { T_Chrome_2B }}

                        box { <-(X1-3.75), Y1-2.7, H+0.1>, <-(X1+0.1), Y1-6,
5.5> texture { T_Chrome_2B }}
                        box { <-(X1-0.5), Y1-3.35, H+0.1>, <-(X1+0.1),
Y1-5.35, -0.5> texture { T_Chrome_2B }}

                        box { <X1-3.75, -(Y2-3.7), H+0.1>, <X1+0.1, -(Y2-7),
5.5>     texture { T_Chrome_2B }}
                        box { <X1-0.5, -(Y2-4.35), H+0.1>, <X1+0.1, -
(Y2-6.35), -0.5>     texture { T_Chrome_2B }}

                        box { <-(X1-3.75), -(Y2-3.7), H+0.1>, <-(X1+0.1), -
(Y2-7), 5.5>     texture { T_Chrome_2B }}
                        box { <-(X1-0.5), -(Y2-4.35), H+0.1>, <-(X1+0.1), -
(Y2-6.35), -0.5>     texture { T_Chrome_2B }}

                }
        }
```

```
        difference{
                union{
                        cylinder { <0, 0, H+LB>, <0, 0, (H+L1)-1.5>, R6
pigment { Gray20 }}
                        cone { <0, 0, H+L1>, 2.5, <0, 0, (H+L1)-1.5>, 3
pigment { Gray20 }}
                }
                union{
                        box { <-3.1, -1.5, H+(L1-12)><3.1, -(R6+0.1),
H+L1+0.1> pigment { Gray20 }}
                        box { < -0.55, -3, H+(L1-1.5)>< 0.55, 3, H+L1+0.1>
pigment { Gray20 }}



                }

        }
        cylinder { <0, 0, H>, <0, 0, H+LB>, M9
texture { T_Chrome_2B }}
        box { <X1-0.5, Y1-3.35, H1>,            <X1, Y1-5.35, 6>
texture { T_Silver_5A }}
        box { <X1-2.3, Y1-3.35, 5.5>,           <X1, Y1-5.35, 6>
texture { T_Silver_5A }}

        box { <-(X1-0.5), Y1-3.35, H1>,         <-(X1), Y1-5.35, 6>
texture { T_Silver_5A }}
        box { <-(X1-2.3), Y1-3.35, 5.5>,        <-(X1), Y1-5.35, 6>
texture { T_Silver_5A }}

        box { <X1-0.5, -(Y2-4.35), H1>,         <X1, -(Y2-6.35), 6>
texture { T_Silver_5A }}
        box { <X1-2.3, -(Y2-4.35), 5.5>,        <X1, -(Y2-6.35), 6>
texture { T_Silver_5A }}

        box { <-(X1-0.5), -(Y2-4.35), H1>,      <-(X1), -(Y2-6.35), 6>
texture { T_Silver_5A }}
        box { <-(X1-2.3), -(Y2-4.35), 5.5>,     <-(X1), -(Y2-6.35), 6>
texture { T_Silver_5A }}

        //encoder pins
        box { < -0.5, -10.3, -3>,               < 0.5, -10.7, 0>
texture { T_Silver_5A }}
        box { < -5.5, -10.3, -3>,               < -4.5, -10.7, 0>
texture { T_Silver_5A }}
        box { < 5.5, -10.3, -3>,                < 4.5, -10.7, 0>
texture { T_Silver_5A }}

        box { < -1, -10.3, 0>,                  < 1, -10.7, 2>
texture { T_Silver_5A }}
        box { < -6, -10.3, 0>,                  < -4, -10.7, 2>
```

```
texture { T_Silver_5A }}
        box { < 6, -10.3, 0>,                    < 4, -10.7, 2>
texture { T_Silver_5A }}

        box { < -1, 0, 1.8>,                       < 1, -10.7, 2.2>
texture { T_Silver_5A }}
        box { < -6, 0, 1.8>,                       < -4, -10.7, 2.2>
texture { T_Silver_5A }}
        box { < 6, 0, 1.8>,                        < 4, -10.7, 2.2>
texture { T_Silver_5A }}

        box { < 7.62-0.25, -2.3, 0>,             < 7.62+0.25, 2.3, 1>
texture { T_Silver_5A }}
        box { < 7.62-0.25, -1, -3.5>,            < 7.62+0.25, 1, 0>
texture { T_Silver_5A }}

        box { < -(7.62-0.25), -2.3, 0>,          < -(7.62+0.25), 2.3, 1>
texture { T_Silver_5A }}
        box { < -(7.62-0.25), -1, -3.5>,         < -(7.62+0.25), 1, 0>
texture { T_Silver_5A }}
}
rotate<-90,180,0>
#end
```

Nokia 3310 LCD

```
/*****************************************************************************
*************************************************************
//Nokia 3310 LCD
//Created from Jack(forum.midibox.org) on 16-Jan-2006
//
*****************************************************************************
*************************************************************/
#macro USER_3310LCD()
union{
        //body
        box { <-19, -14.5, -0.7>, <19.5, 21, 0> pigment { Col_Glass_General
} }
        box { <-19, -14.5, -1.45>, <19.5, 21, -0.7> pigment {
Col_Glass_General } }
        box { <-19, -14.5, -1.7>, <19.5, 21, -1.45> pigment { Gray10 }
finish {ambient 1 diffuse 0 phong_size 250} }

        //screen
        #declare PIXEL =
        box {<-0.125, -0.2, -0.7>, <0.125, 0.2, -0.9>

        texture{pigment{Col_Glass_Bluish} finish {ambient 1 diffuse 0 phong
1}}}
```

```
        #declare DistanceX = (119/332);
        #declare DistanceY = (108/235);
        #declare NrX = -14.875;  // startX
        #declare EndNrX = NrX + 83 * DistanceX;   // endX
        #while (NrX <= EndNrX) // <-loop X
         #declare NrY = -10.8;     // start
         #declare EndNrY = NrY + 47 * DistanceY;  // end
        #while (NrY <= EndNrY)//<- loop Z
        object{PIXEL translate<NrX,NrY,0>}
        #declare NrY = NrY+(108/235);// next NrZ
         #end // ----------- end of loop Z
        #declare NrX = NrX+(119/332);  // next NrX
        #end // ------- end of loop X ---
}
rotate<-90,180,0>
#end
```

LEDRING TEST

```
/*****************************************************************************
*************************************************************
//LED_RING_TEST
//Jack from forum.midibox.org
//
*****************************************************************************
*************************************************************/
#macro USER_LED_RING()
union{
      #declare X = 0.1;          //littlemore
      #declare H0 = 0;           //Body startpoint
      #declare H1 = 1.5;           //Body Height
      #declare H20 = H1+X;       //Glas startpoint
      #declare H2 = H20+0.5;        //Glas Height
      #declare H10 = H1-0.25;        //Glas Height
      #declare DF = 0.9;        //Diffuse
      #declare P1 = 0.5;        //Phong
      #declare C1 = Grey;        //Color (Grey)
      #declare R1 = 17.78;       //R.0700 outer radius
      #declare R2 = 10.16;       //R0.400 inner radius
      #declare R3 = 13.97;      //R.550 center radius
      #declare LW = 0.75;       //LED hole width / 2       (1,27)
      #declare LL = 2.00;        //LED hole length /2       (2,54)

      #declare AS = 15;          //angle steps
      #declare A0 = 0;           //angle 0
      #declare A1 = 75;          //start angle 1
      #declare A2 = A1+AS;       //angle 2
      #declare A3 = A2+AS;       //angle 3
      #declare A4 = A3+AS;       //angle 4
      #declare A5 = A4+AS;       //angle 5
```

```
      #declare A6 = A5+AS;      //angle 6
      #declare A7 = A6+AS;      //angle 7
      #declare A8 = A7+AS;      //angle 8
      #declare A9 = A8+AS;      //angle 9
      #declare A10 = A9+AS;     //angle 10
      #declare A11 = A10+AS;    //angle 11
      #declare A12 = A11+AS;    //angle 12
      #declare A13 = A12+AS;    //angle 13
      #declare A14 = A13+AS;    //angle 14
      #declare A15 = A14+AS;    //angle 15

      difference{
        union{
                cylinder {<0,H0,0>,<0,H1,0>, R1 texture{pigment{color
Black}finish {diffuse DF phong P1}}}
        }
        union{
                cylinder {<0,H0-X>,<0,H1+X>, R2}
                box {<-LW,H0-X,-LL>,<+LW,H1+X,LL> translate< 0,0,R3>
rotate<0,A0,0>}     //1
                box {<-LW,H0-X,-LL>,<+LW,H1+X,LL> translate< 0,0,R3>
rotate<0,A1,0>}     //2
                box {<-LW,H0-X,-LL>,<+LW,H1+X,LL> translate< 0,0,R3>
rotate<0,A2,0>}     //3
                box {<-LW,H0-X,-LL>,<+LW,H1+X,LL> translate< 0,0,R3>
rotate<0,A3,0>}     //4
                box {<-LW,H0-X,-LL>,<+LW,H1+X,LL> translate< 0,0,R3>
rotate<0,A4,0>}     //5
                box {<-LW,H0-X,-LL>,<+LW,H1+X,LL> translate< 0,0,R3>
rotate<0,A5,0>}     //6
                box {<-LW,H0-X,-LL>,<+LW,H1+X,LL> translate< 0,0,R3>
rotate<0,A6,0>}     //7
                box {<-LW,H0-X,-LL>,<+LW,H1+X,LL> translate< 0,0,R3>
rotate<0,A7,0>}     //8
                box {<-LW,H0-X,-LL>,<+LW,H1+X,LL> translate< 0,0,R3>
rotate<0,A8,0>}     //9
                box {<-LW,H0-X,-LL>,<+LW,H1+X,LL> translate< 0,0,R3>
rotate<0,A9,0>}     //10
                box {<-LW,H0-X,-LL>,<+LW,H1+X,LL> translate< 0,0,R3>
rotate<0,A10,0>}     //11
                box {<-LW,H0-X,-LL>,<+LW,H1+X,LL> translate< 0,0,R3>
rotate<0,A11,0>}     //12
                box {<-LW,H0-X,-LL>,<+LW,H1+X,LL> translate< 0,0,R3>
rotate<0,A12,0>}     //13
                box {<-LW,H0-X,-LL>,<+LW,H1+X,LL> translate< 0,0,R3>
rotate<0,A13,0>}     //14
                box {<-LW,H0-X,-LL>,<+LW,H1+X,LL> translate< 0,0,R3>
rotate<0,A14,0>}     //15
                box {<-LW,H0-X,-LL>,<+LW,H1+X,LL> translate< 0,0,R3>
rotate<0,A15,0>}     //16
```

```
        }

      }
/*      difference{
        cylinder {<0,H20,0>,<0,H2,0>, R1 texture{pigment{color C1 transmit
0.5} finish {diffuse DF phong P1}}}
        cylinder {<0,H20-X,0>,<0,H2+X>, R2}
      }
*/
                box {<-LW,H10,-LL>,<+LW,H1,LL> translate< 0,0,R3>
rotate<0,A0,0> texture{pigment{color C1 transmit 0.5} finish {diffuse DF
phong P1}}}     //1
                box {<-LW,H10,-LL>,<+LW,H1,LL> translate< 0,0,R3>
rotate<0,A1,0> texture{pigment{color C1 transmit 0.5} finish {diffuse DF
phong P1}}}     //2
                box {<-LW,H10,-LL>,<+LW,H1,LL> translate< 0,0,R3>
rotate<0,A2,0> texture{pigment{color C1 transmit 0.5} finish {diffuse DF
phong P1}}}     //3
                box {<-LW,H10,-LL>,<+LW,H1,LL> translate< 0,0,R3>
rotate<0,A3,0> texture{pigment{color C1 transmit 0.5} finish {diffuse DF
phong P1}}}     //4
                box {<-LW,H10,-LL>,<+LW,H1,LL> translate< 0,0,R3>
rotate<0,A4,0> texture{pigment{color C1 transmit 0.5} finish {diffuse DF
phong P1}}}     //5
                box {<-LW,H10,-LL>,<+LW,H1,LL> translate< 0,0,R3>
rotate<0,A5,0> texture{pigment{color C1 transmit 0.5} finish {diffuse DF
phong P1}}}     //6
                box {<-LW,H10,-LL>,<+LW,H1,LL> translate< 0,0,R3>
rotate<0,A6,0> texture{pigment{color C1 transmit 0.5} finish {diffuse DF
phong P1}}}     //7
                box {<-LW,H10,-LL>,<+LW,H1,LL> translate< 0,0,R3>
rotate<0,A7,0> texture{pigment{color C1 transmit 0.5} finish {diffuse DF
phong P1}}}     //8
                box {<-LW,H10,-LL>,<+LW,H1,LL> translate< 0,0,R3>
rotate<0,A8,0> texture{pigment{color C1 transmit 0.5} finish {diffuse DF
phong P1}}}     //9
                box {<-LW,H10,-LL>,<+LW,H1,LL> translate< 0,0,R3>
rotate<0,A9,0> texture{pigment{color C1 transmit 0.5} finish {diffuse DF
phong P1}}}     //10
                box {<-LW,H10,-LL>,<+LW,H1,LL> translate< 0,0,R3>
rotate<0,A10,0> texture{pigment{color C1 transmit 0.5} finish {diffuse DF
phong P1}}}     //11
                box {<-LW,H10,-LL>,<+LW,H1,LL> translate< 0,0,R3>
rotate<0,A11,0> texture{pigment{color C1 transmit 0.5} finish {diffuse DF
phong P1}}}     //12
                box {<-LW,H10,-LL>,<+LW,H1,LL> translate< 0,0,R3>
rotate<0,A12,0> texture{pigment{color C1 transmit 0.5} finish {diffuse DF
phong P1}}}     //13
                box {<-LW,H10,-LL>,<+LW,H1,LL> translate< 0,0,R3>
rotate<0,A13,0> texture{pigment{color C1 transmit 0.5} finish {diffuse DF
phong P1}}}     //14
```

```
                box {<-LW,H10,-LL>,<+LW,H1,LL> translate< 0,0,R3>
rotate<0,A14,0> texture{pigment{color C1 transmit 0.5} finish {diffuse DF
phong P1}}}     //15
                box {<-LW,H10,-LL>,<+LW,H1,LL> translate< 0,0,R3>
rotate<0,A15,0> texture{pigment{color C1 transmit 0.5} finish {diffuse DF
phong P1}}}     //16
}
rotate<0,180,0>
#end
```

POV-Ray tweaks

For better image quality, change the file “quickres.ini” in “<POV-RAY directory>/renderer”:

```
[1280x1024, AA 20x0.3]
Width=1280
Height=1024
Antialias=on
Antialias_Threshold=0.1
Antialias_Depth=20
```

From:
https://wiki.midibox.org/ - **MIDIbox**

Permanent link:
https://wiki.midibox.org/doku.php?id=eagle3d_midibox_user_pack&rev=1234819679

Last update: **2009/02/16 21:27**