Fadercore

Standard 220mm wide modules

VLR-8Enc

A PCB to add 8 Encoders with LED ring for each.

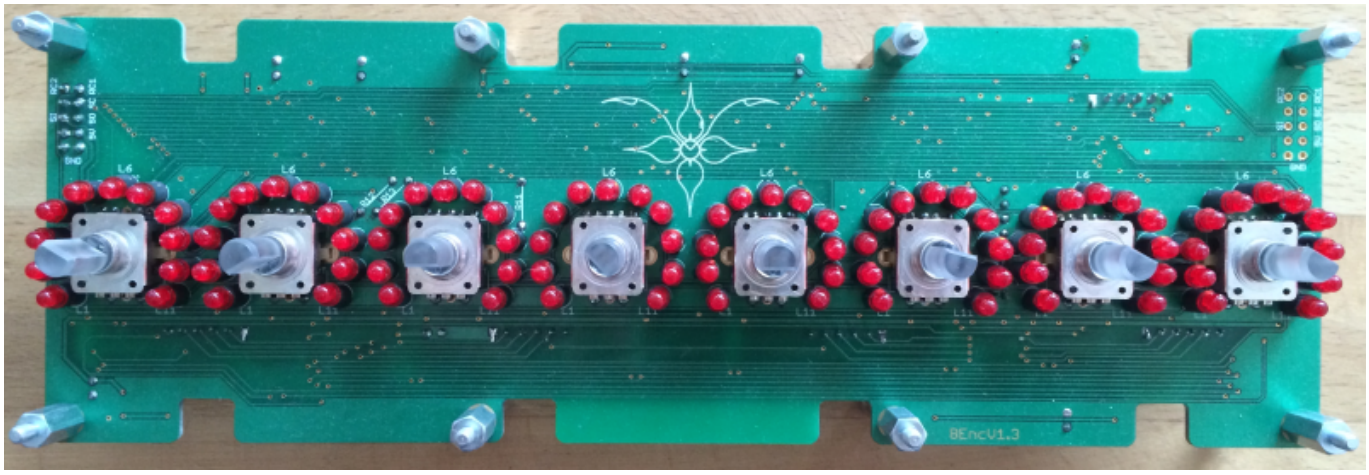

Eagle Files: https://github.com/novski/Midibox/tree/master/VLR-8Enc

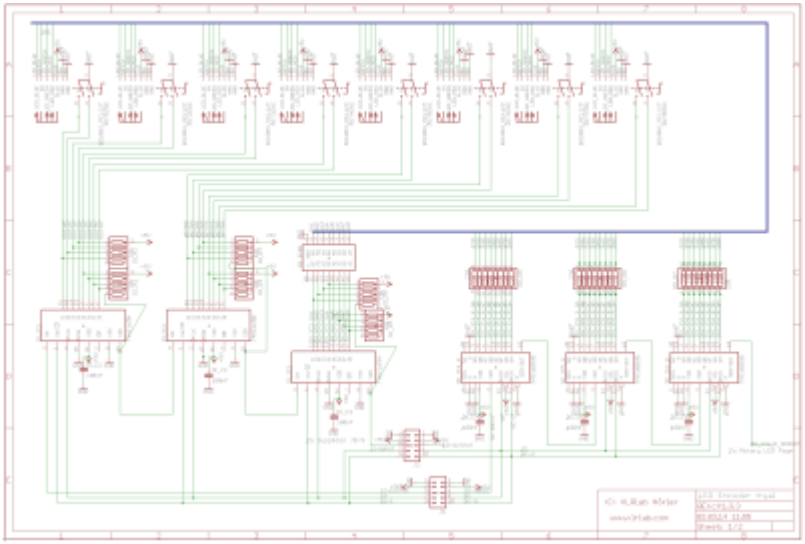

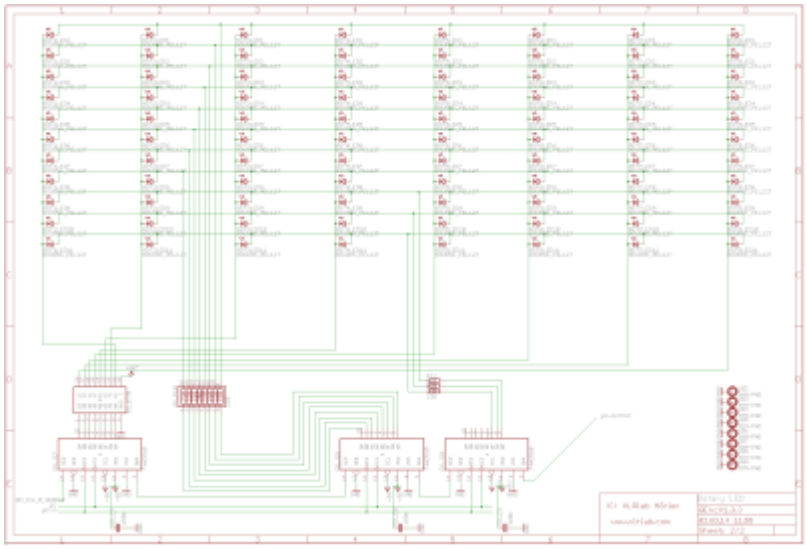

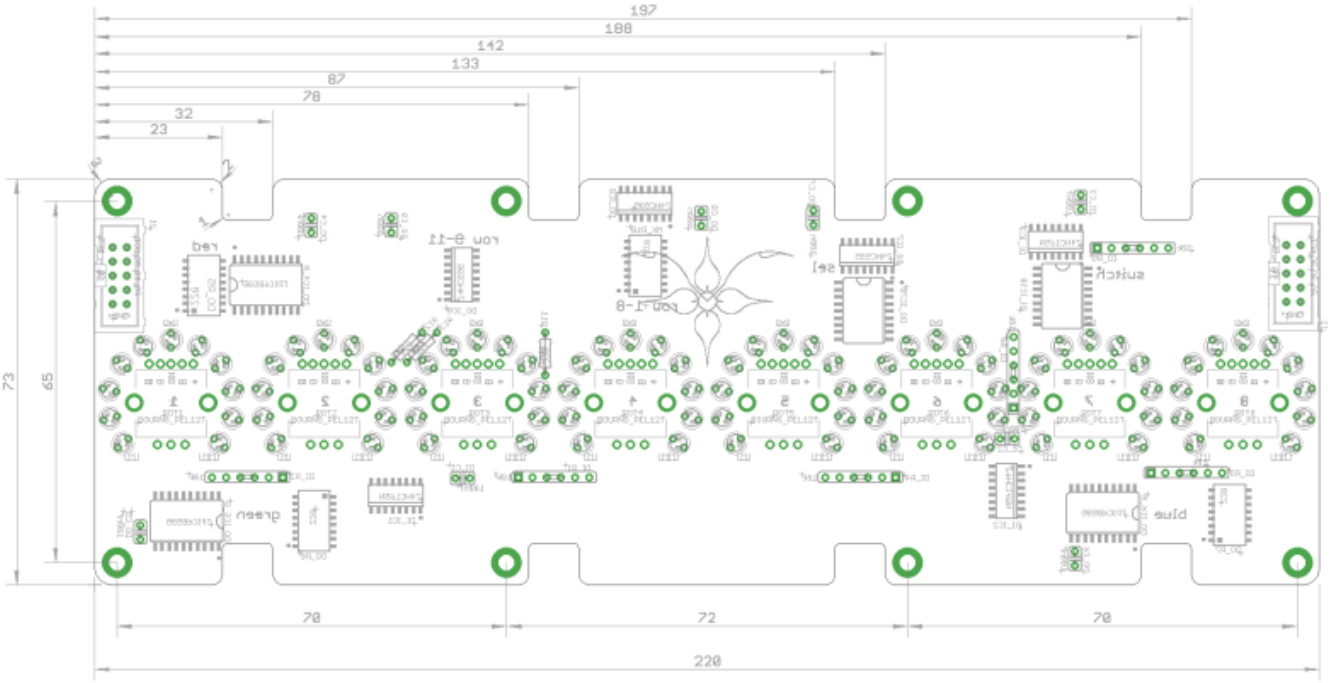

BOM

BIll of Material

Allways look for the cheapest seller, the Price may vary heavy!!! And look for Local dealers preferred.

The OLEDs

I got those displays from this dealer: http://www.aliexpress.com/snapshot/207517549.html

The other Materials: Mouser

- 2x10pin Header, 517-30310-6002
- 1x16pin Header, 517-30316-6002

- 2x8Pin DIP, 571-1-390261-4
- 1xResistor Array 220Ohm, 652-4116R-1LF-220
- 1x74HC595, 595-SN74HC595N
- 2x100nF, 505-MKS2.1/63/5
- 1x100uF, 667-ECE-A1EKA100
- 1x1kOhm, 660-MF1/4DCT52A1001F
- 8xFemale Header, 649-66953-008

Project Order Basket on Mouser:
http://www.mouser.com/ProjectManager/ProjectDetail.aspx?AccessID=0c73d90bd5

The PCB is available under: https://vlrlab.com/pcb/10-8-odisplay.html

How to get Started

You will need to set the Connection of the Display.





So all 3 Code Resistors need to be on the Left side...

If you don't like the LED on top you can de-solder it now.

Prepare the PCB

The first PCB gets its Selection Lines from the Display Connection J15A on the Core PCB. So you will need to solder the 16Pin Header at this Panel. Here you can leave out the 10pin Headers and the IC Socket for the Shift register, if you like.

The Second PCB for Display 9-16 gets its Selection lines from the Shift register and doesn't need the 16pin Header so you have to solder J1 and J2 but you can leave out J0.

For both use cases you need to stuff the Resistor array so its best to solder a 16pin IC-Socket and stuff it in that.

PCB 3&4 are same as the second.

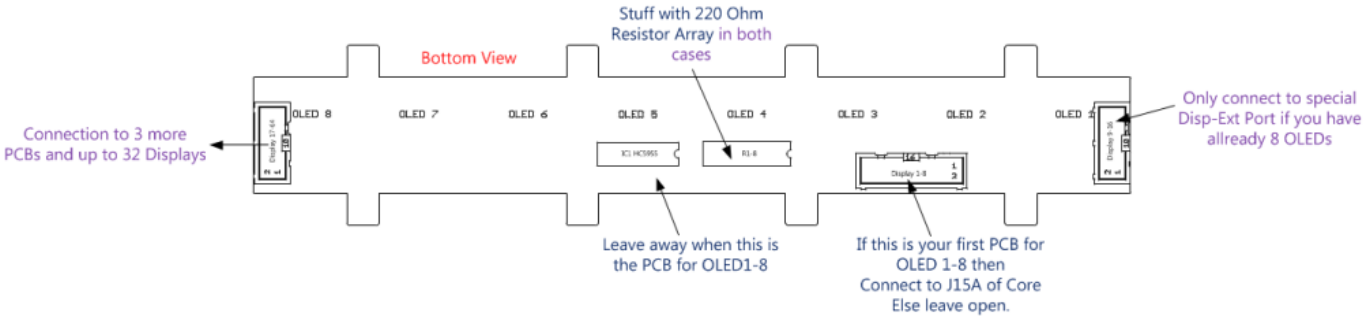

Prepare the Connection

How to connect it to the Core

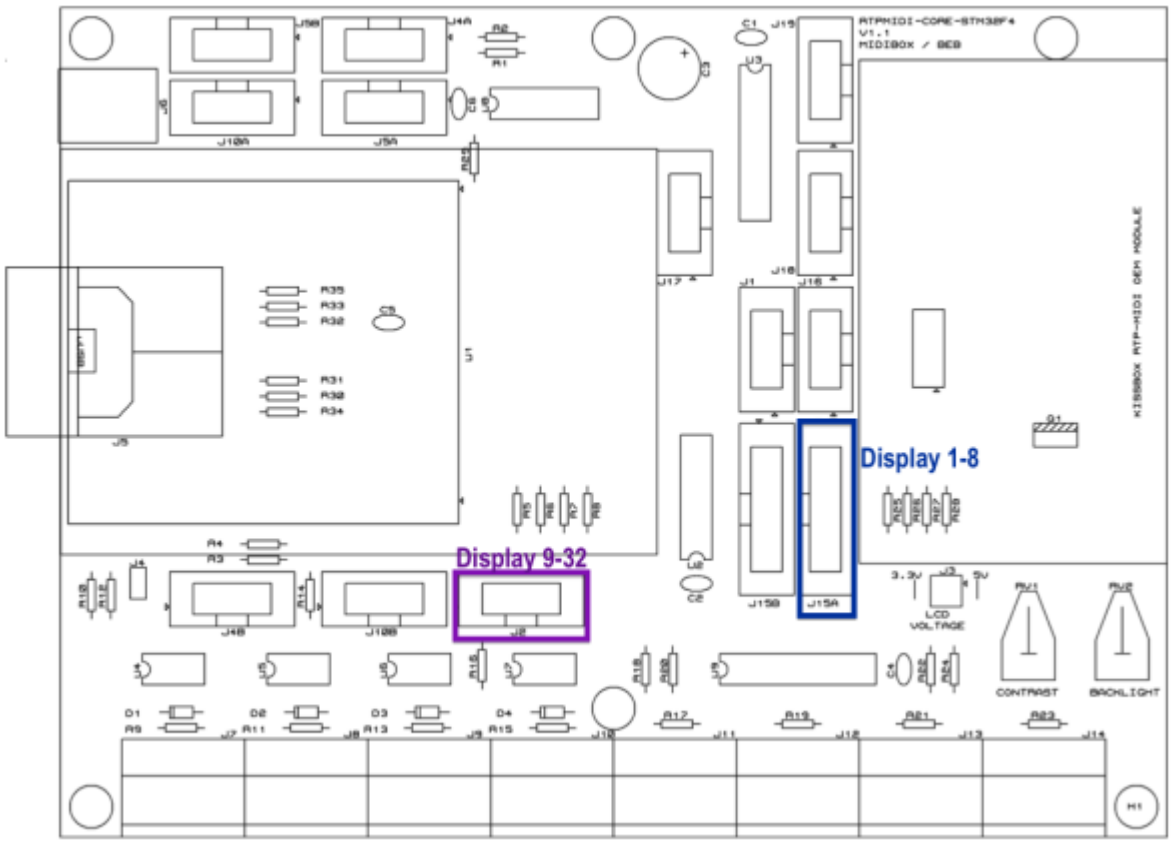

Test it in MIOS

From:
https://wiki.midibox.org/ - **MIDIbox**

Permanent link:
https://wiki.midibox.org/doku.php?id=fadercore_-_vlr-8enc&rev=1406383308

Last update: **2014/07/26 14:01**