Fadercore

Standard 220mm wide modules

VLR-8Enc

A PCB to add 8 Encoders with LED ring for each.

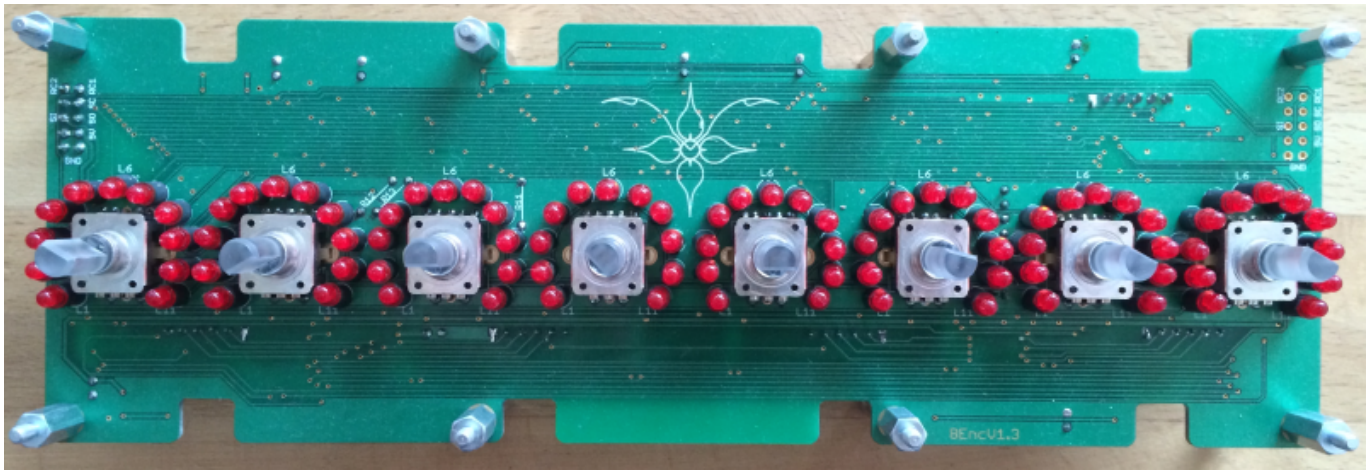

Eagle Files: https://github.com/novski/Midibox/tree/master/VLR-8Enc

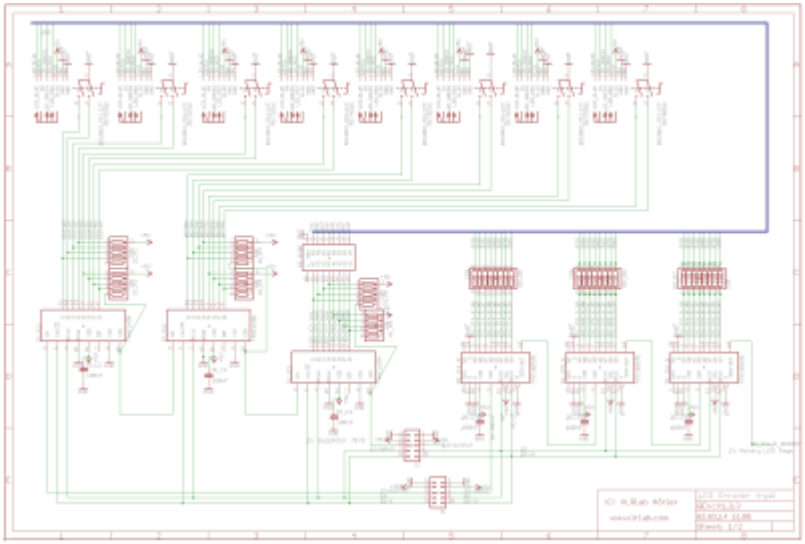

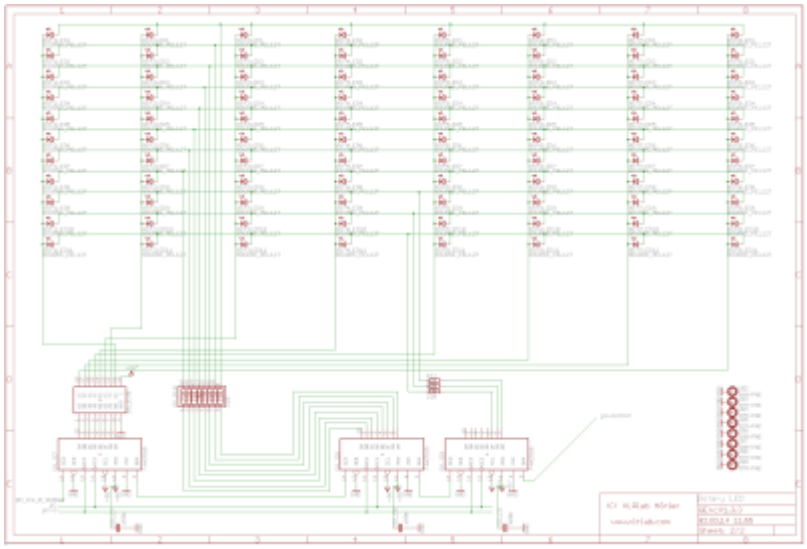

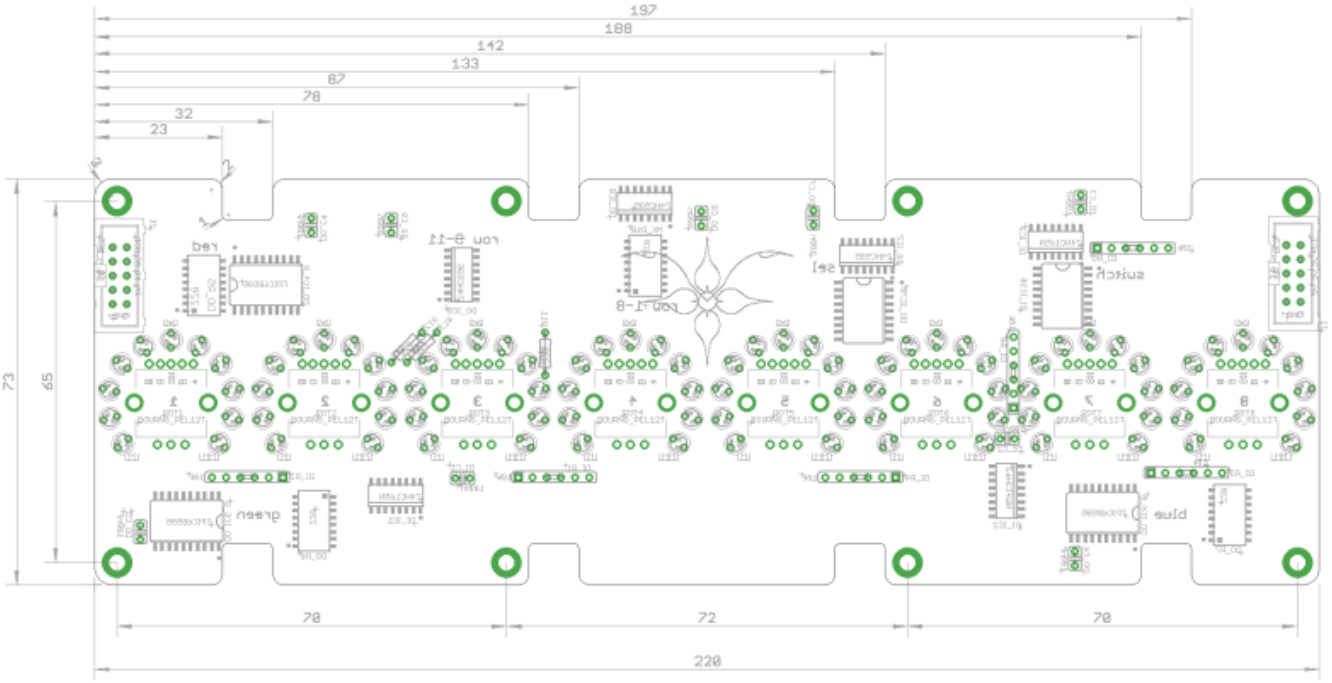

BOM

BIll of Material

Allways look for the cheapest seller, the Price may vary heavy!!! And look for Local dealers preferred.
http://www.midibox.org/dokuwiki/doku.php?id=where_to_order_components

The Encoders

I was fascinated about the RGB Shaft of this Encoder so i developed all opon this nice piece. Its not the cheapest but i sell them for a reasonable price.

The other Materials: Mouser

- 2x10pin Header, 517-30310-6002
- 1xResistor Array 220Ohm SMD,
- 1x74HC595 SMD,
- 2x100nF,

Project Order Basket on Mouser: fadercore_-_vlr-8enc

The PCB is available under: https://vlrlab.com/pcb/10-8-odisplay.html

How to get Started

Prepare the PCB

Prepare the Connection

Test it in MIOS

From:
https://wiki.midibox.org/ - **MIDIbox**

Permanent link:
https://wiki.midibox.org/doku.php?id=fadercore_-_vlr-8enc&rev=1406383626

Last update: **2014/07/26 14:07**