Fadercore

Standard 220mm wide modules

VLR-8Enc

A PCB to add 8 Encoders with LED ring for each.

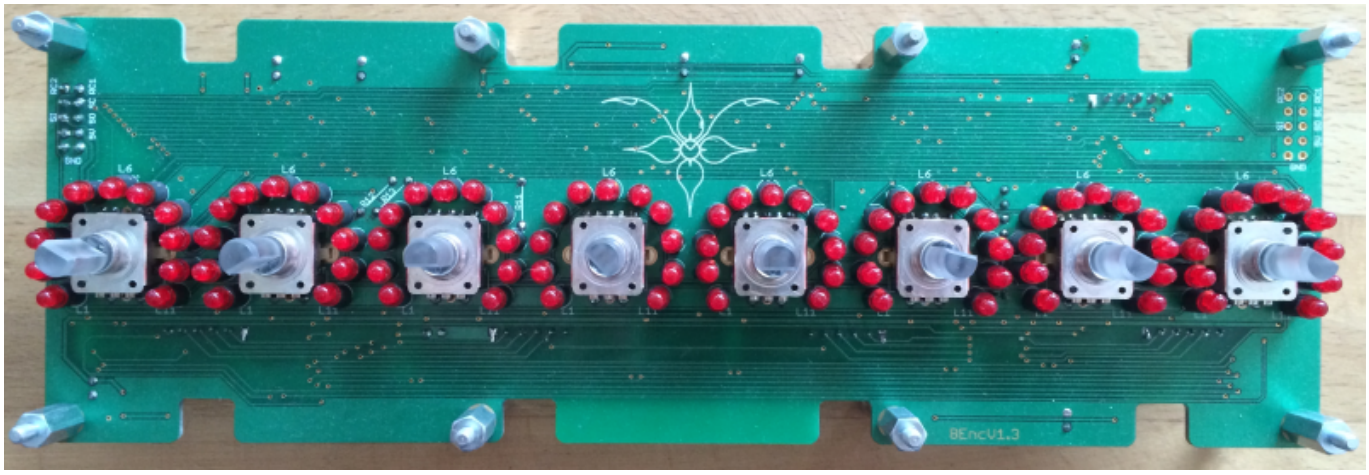

Eagle Files: https://github.com/novski/Midibox/tree/master/VLR-8Enc

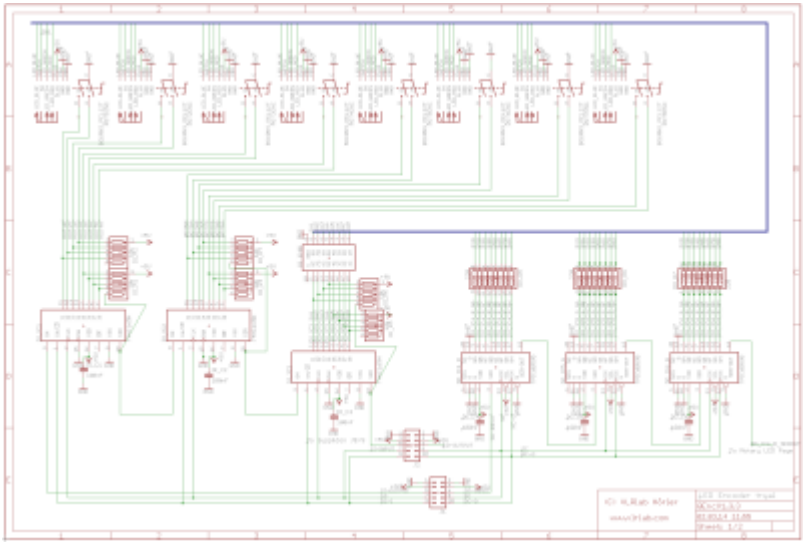

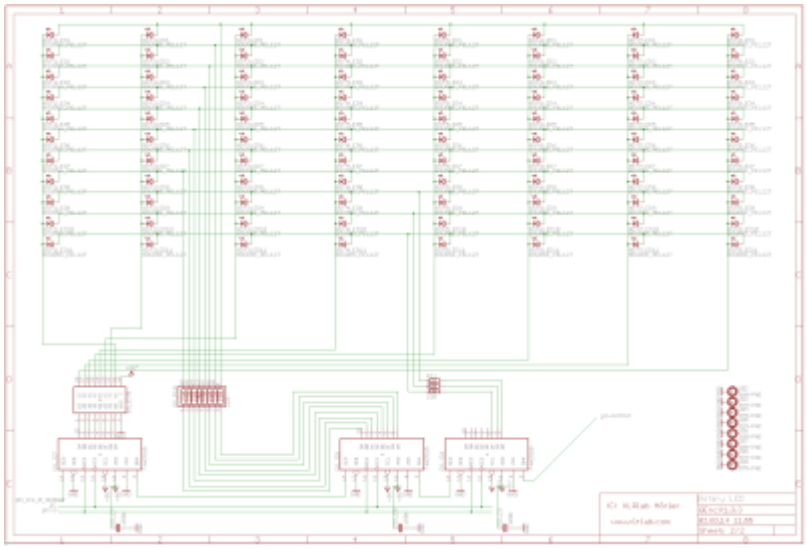

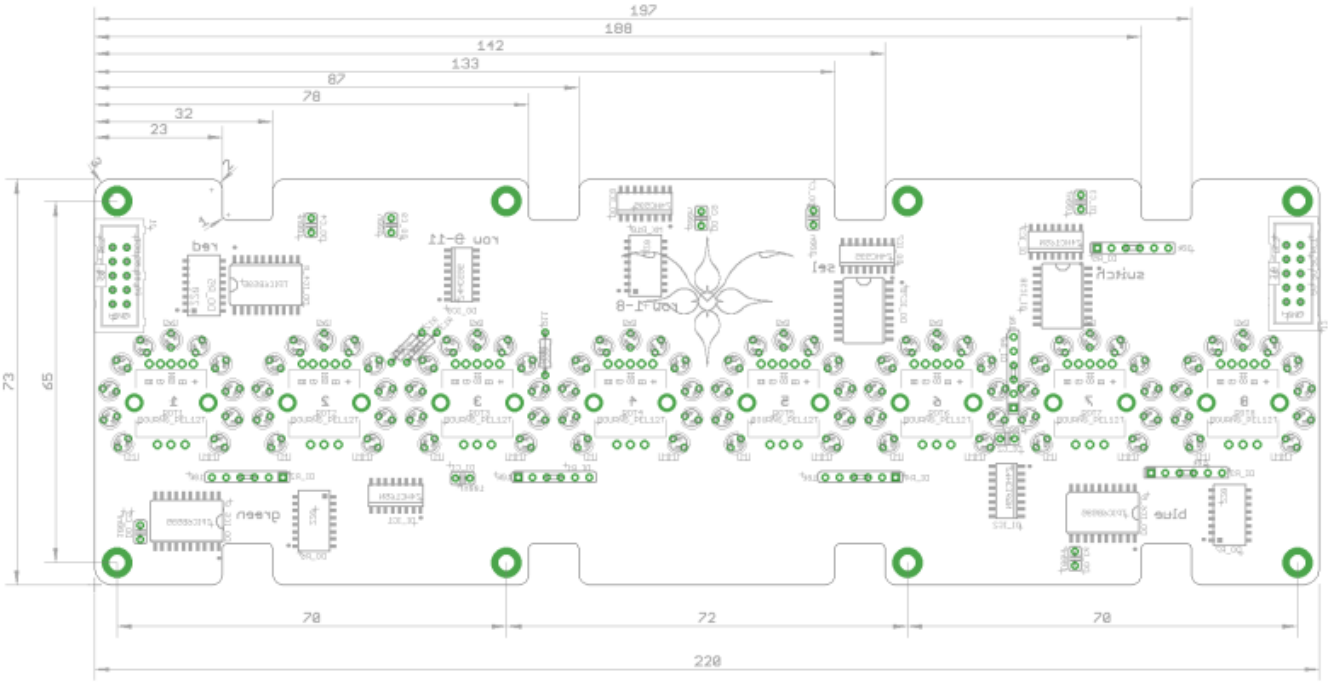

BOM

BIll of Material

Qty Value Device Package 2 ML10 ML10 2 ULN2803SO18W SO18W 3 100n C-EU025-024×044 C025-024×044 6 100nF C-EU025-024×044 C025-024×044 6 10k 4306R SIL6 4 220 4816P-1SOIC16W SOIC16W 3 220 R-EU_0204/7 0204/7 3 74HC165N 74HC165NSO16D SO16D 3 74HC595 74HC595SO16D SO16D 8 BOURNS_PEL12T BOURNS_PEL12T_11-LED-RING PEL12T_11-LED-RING 3 TPIC6B595 TPIC6B595SO20W SO20W

Allways look for the cheapest seller, the Price may vary heavy!!! And look for Local dealers preferred. http://www.midibox.org/dokuwiki/doku.php?id=where_to_order_components

The Encoders

I was fascinated about the RGB Shaft of this Encoder so i developed all opon this nice piece. Its not the cheapest but i sell them for a reasonable price.

The other Materials: Mouser

- 2x10pin Header, 517-30310-6002
- 1xResistor Array 220Ohm SMD,
- 1x74HC595 SMD,
- 2x100nF,

Project Order Basket on Mouser: fadercore_-_vlr-8enc

The PCB is available under: https://vlrlab.com/pcb/10-8-odisplay.html

How to get Started

Prepare the PCB

Prepare the Connection

Test it in MIOS

From:
https://wiki.midibox.org/ - **MIDIbox**

Permanent link:
https://wiki.midibox.org/doku.php?id=fadercore_-_vlr-8enc&rev=1406384891

Last update: **2014/07/26 14:28**