Fadercore

Standard 220mm wide modules

VLR-8Enc

A PCB to add 8 Encoders with LED ring for each.

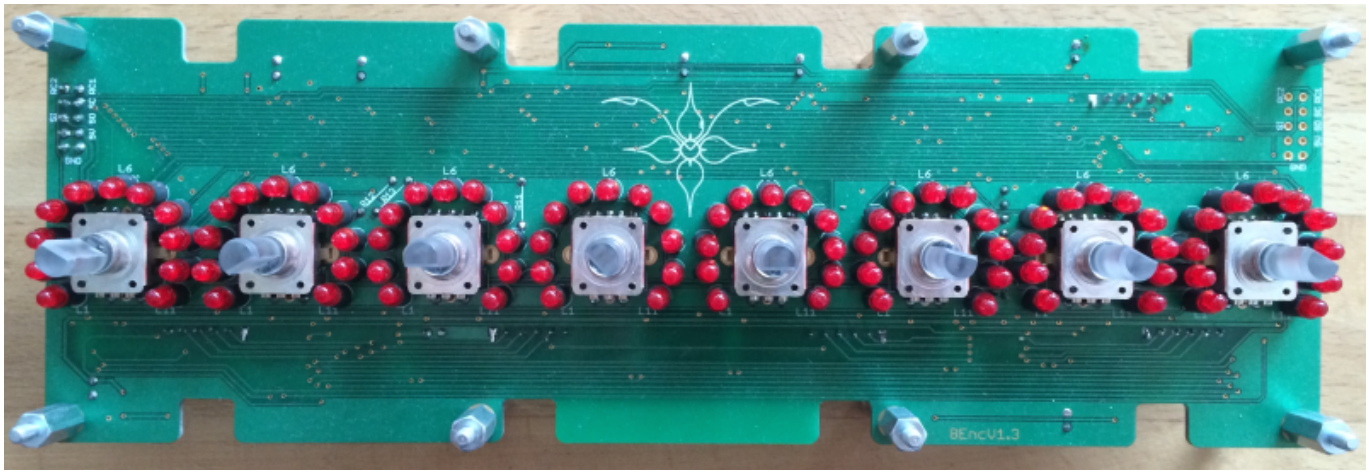

Eagle Files: https://github.com/novski/Midibox/tree/master/VLR-8Enc

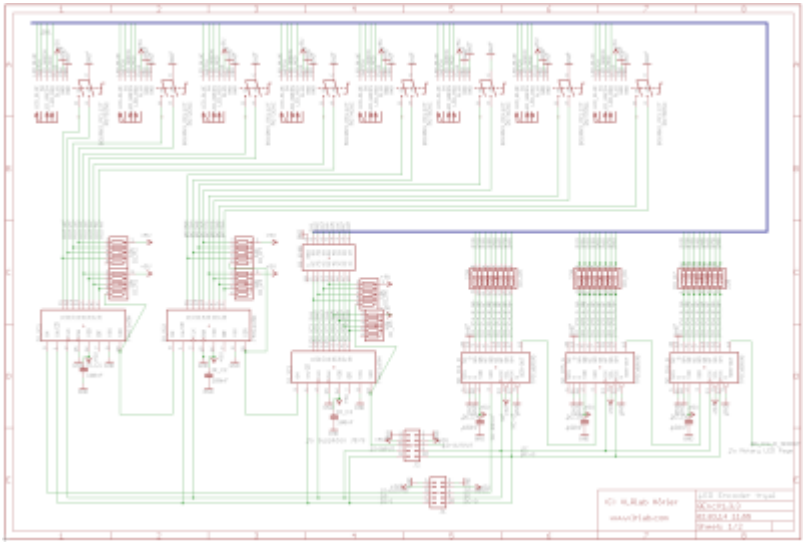

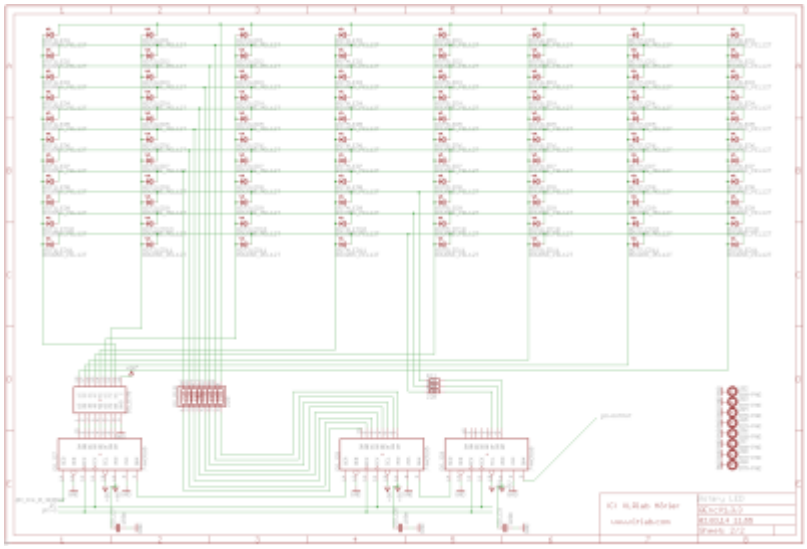

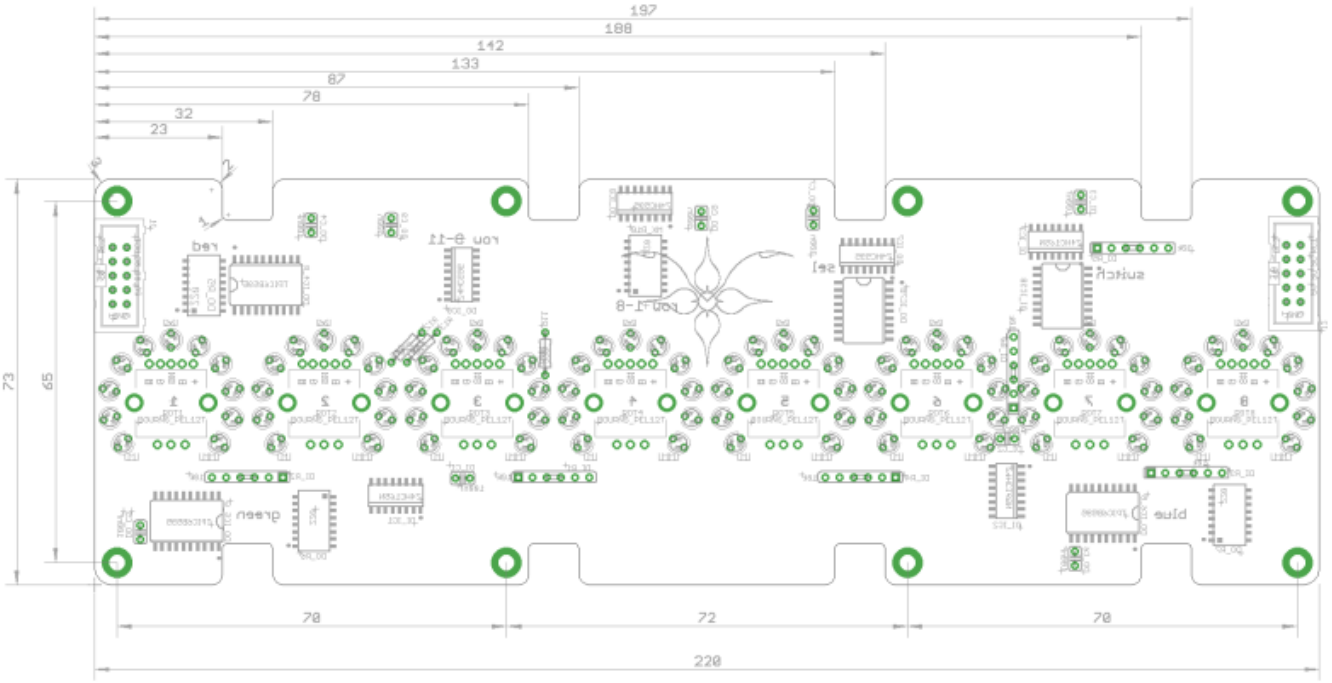

BOM

BIll of Material

Allways look for the cheapest seller, the Price may vary heavy!!! And look for Local dealers preferred.
http://www.midibox.org/dokuwiki/doku.php?id=where_to_order_components

The Encoders

I was fascinated about the RGB Shaft of this Encoder so i developed all opon this nice piece. Its not the cheapest but i sell them for a reasonable price.

And its still possible to use a non Illuminated Encoder.

The other Materials: Mouser

- 2x10pin Header, 517-30310-6002
- 1xResistor Array 220Ohm SMD,
- 1x74HC595 SMD,

```
* 2xULN2803, 595-ULN2803ADWR
* 9x100nF,594-K104K15X7RF53K2
* 6x10k, 774-77061103P
* 4x220, 652-4816P-T1LF-220
* 3x220, 660-MF1/2LCT52R221J
* 3x74HC165N
* 3x74HC595
* 8xBOURNS_PEL12T
* 3xTPIC6B595, because the MOQ is 250 i deliver them for you with the PCB.
* 88xLED
* 88xLED holder 6mm Height, 749-ELM-5-6MM
```

Project Order Basket on Mouser: fadercore_-_vlr-8enc

The PCB is available under: https://vlrlab.com/pcb/10-8-odisplay.html

How to get Started

Prepare the PCB

Prepare the Connection

Test it in MIOS

From:
https://wiki.midibox.org/ - **MIDIbox**

Permanent link:
https://wiki.midibox.org/doku.php?id=fadercore_-_vlr-8enc&rev=1406388087

Last update: **2014/07/26 15:21**