Fadercore

Standard 220mm wide modules

VLR-8Enc

A PCB to add 8 Encoders with LED ring for each.

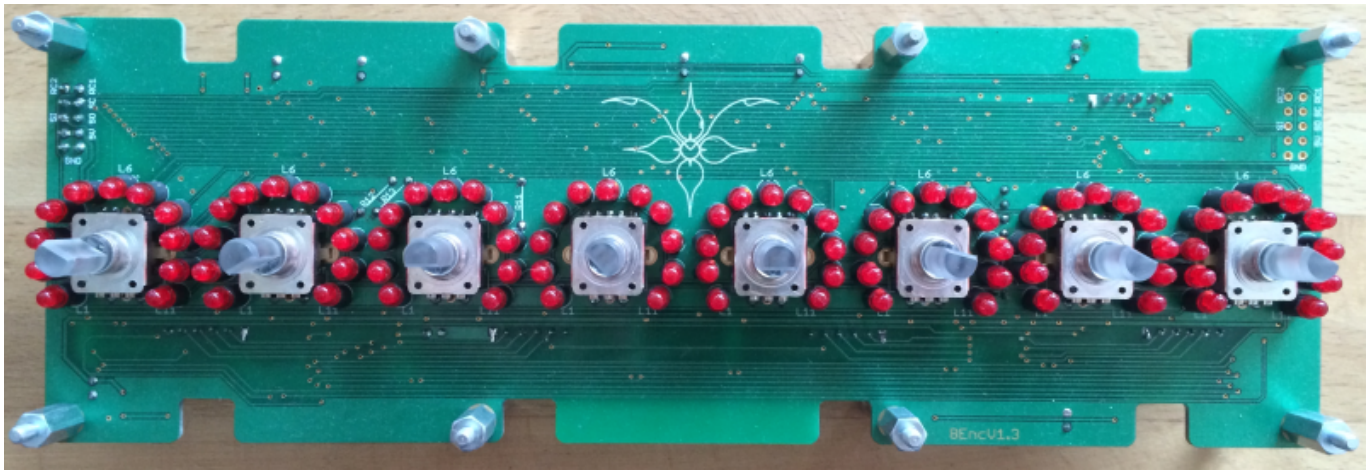

Eagle Files: https://github.com/novski/Midibox/tree/master/VLR-8Enc

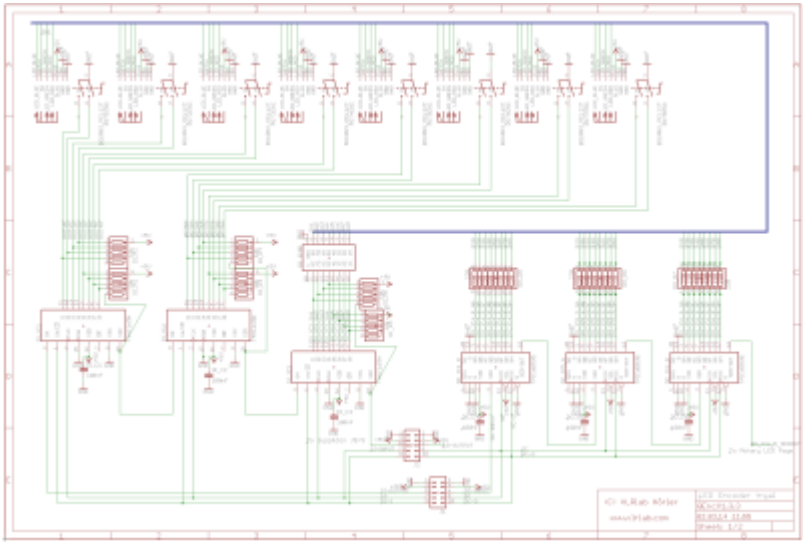

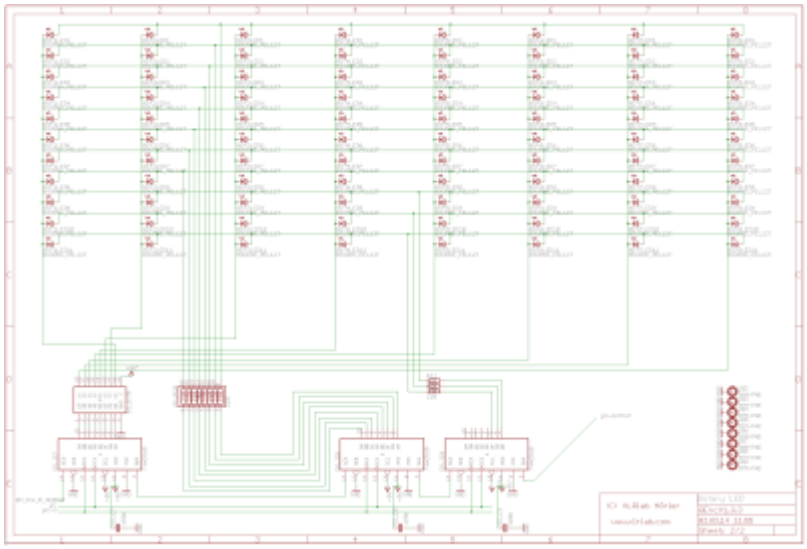

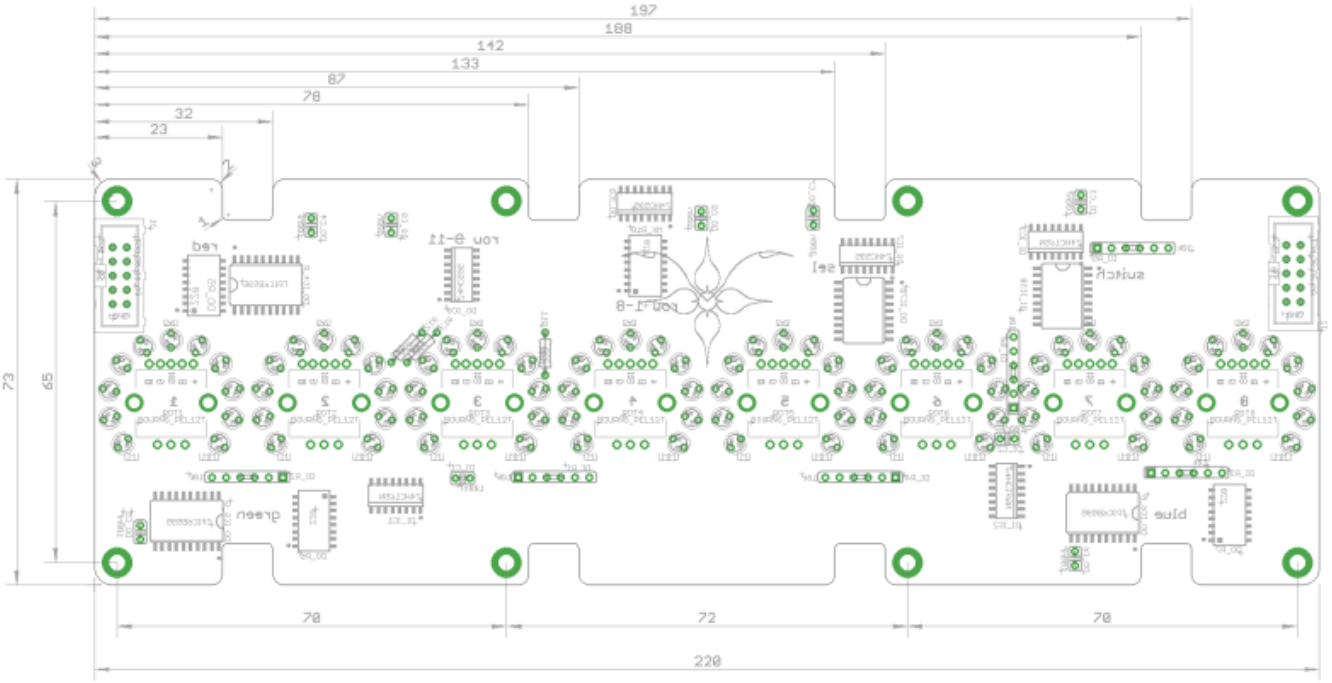

BOM

BIll of Material

Allways look for the cheapest seller, the Price may vary heavy!!! And look for Local dealers preferred.
http://www.midibox.org/dokuwiki/doku.php?id=where_to_order_components

The Encoders

I was fascinated about the RGB Shaft of this Encoder so i developed all opon this nice piece. Its not the cheapest but i sell them for a reasonable price.

And its still possible to use a non Illuminated Encoder.

The other Materials: Mouser

- 2x10pin Header, 517-30310-6002
- 2xULN2803, 595-ULN2803ADWR
- 9x100nF,594-K104K15X7RF53K2
- 6x10k, 774-77061103P
- 4×220, 652-4816P-T1LF-220
- 3×220, 660-MF1/2LCT52R221J
- 3x74HC165D, 771-HC165D652
- 3x74HC595D, 771-74HC595D
- 3xTPIC6B595, because the MOQ is 250 i deliver them for you with the PCB.
- 88xLED RED, 604-WP3A8HD
- 88xLED holder 6mm Height, 749-ELM-5-6MM

Project Order Basket on Mouser:
http://www.mouser.com/ProjectManager/ProjectDetail.aspx?AccessID=a6dbae9ab7

The PCB is available under: http://vlrlab.com/lang/17-8enc.html

- 8 Encoder, 652-PEL12T4226FS1024 not on Projectlist because i deliver cheaper and with cap included..

The Encoder on VLRlabs.com https://www.vlrlab.com/encoder/13-bourns-rgb-led-encoder.html

How to get Started

Prepare the PCB

Prepare the Connection

Test it in MIOS

From:
https://wiki.midibox.org/ - **MIDIbox**

Permanent link:
https://wiki.midibox.org/doku.php?id=fadercore_-_vlr-8enc&rev=1406447374

Last update: **2014/07/27 07:49**