Fadercore

Standard 220mm wide modules

VLR-8Enc

A PCB to add 8 Encoders with LED ring for each.

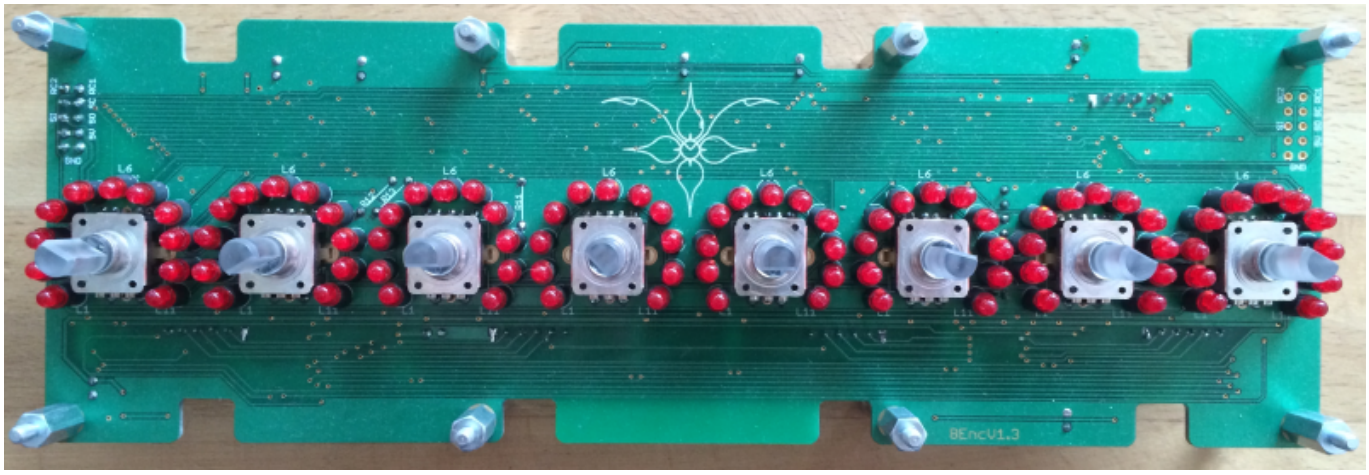

Eagle Files: https://github.com/novski/Midibox/tree/master/VLR-8Enc

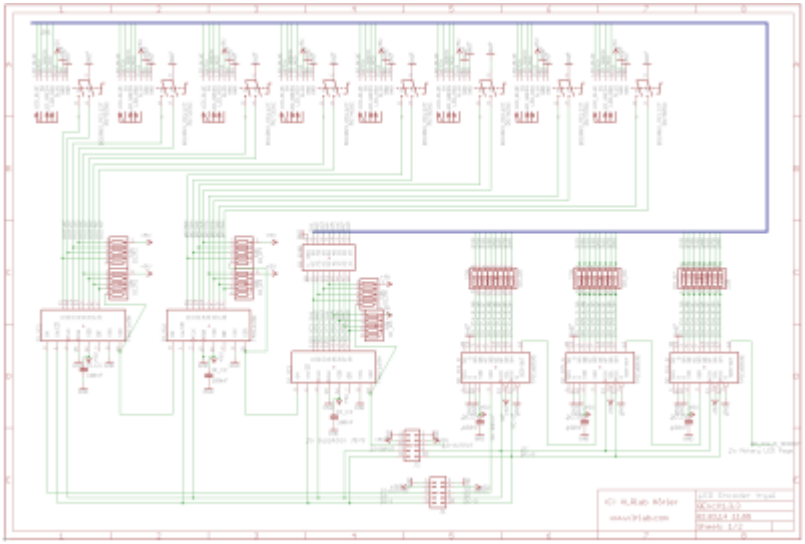

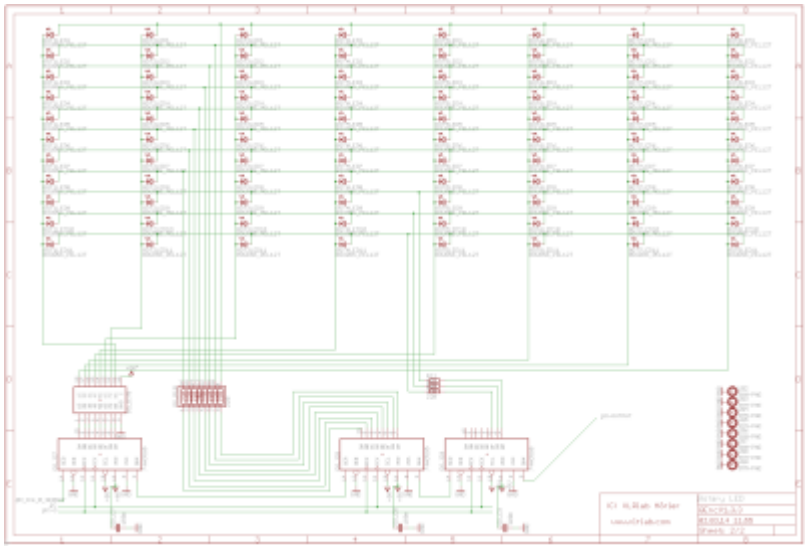

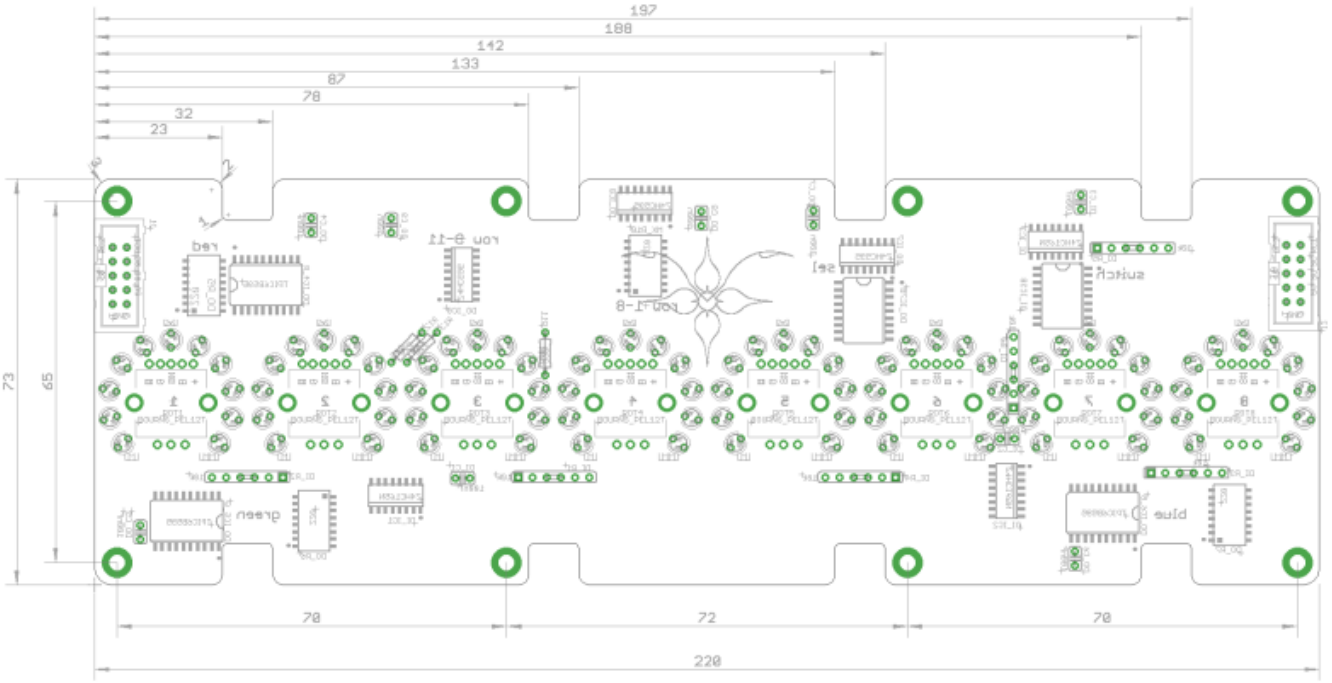

BOM

BIll of Material

Allways look for the cheapest seller, the Price may vary heavy!!! And look for Local dealers preferred.
http://www.midibox.org/dokuwiki/doku.php?id=where_to_order_components

The Encoders

I was fascinated about the RGB Shaft of this Encoder so i developed all opon this nice piece. Its not the cheapest but i sell them for a reasonable price.

And its still possible to use a non Illuminated Encoder.

The other Materials: Mouser

- 2x10pin Header, 517-30310-6002
- 2xULN2803, 595-ULN2803ADWR
- 9x100nF,594-K104K15X7RF53K2
- 6x10k, 774-77061103P
- 4×220, 652-4816P-T1LF-220
- 3×220, 660-MF1/2LCT52R221J
- 3x74HC165D, 771-HC165D652
- 3x74HC595D, 771-74HC595D
- 3xTPIC6B595, because the MOQ is 250 i deliver them for you with the PCB.
- 88xLED RED, 604-WP3A8HD
- 88xLED holder 6mm Height, 749-ELM-5-6MM

Project Order Basket on Mouser:
http://www.mouser.com/ProjectManager/ProjectDetail.aspx?AccessID=a6dbae9ab7

The PCB is available under: http://vlrlab.com/lang/17-8enc.html

- 8 Encoder, 652-PEL12T4226FS1024 **not on Projectlist because i deliver cheaper and with cap included..**

The Encoder on VLRlabs.com https://www.vlrlab.com/encoder/13-bourns-rgb-led-encoder.html

How to get Started

If its your first SMD soldering you can follow this on t1:58 :
http://www.youtube.com/watch?v=5uiroWBkdFY I recommend to not buy solder paste, instead buy some flux-paste like this on Mouser: 590-8341-10ML

Prepare the PCB

Start with the SMD parts and then go on the the conventional parts also on the Bottom side. Don't forget the R11,12,13. Then go on with the Topside and the LEDs before soldering the Encoder as last. Check the Connections with a Lens.

Prepare the Connection

Connect the core on J8/9 to J1 of the VLR-8Enc board.

Test it in MIOS

To make it work with MIOS .NGC File we need to know how the shift-registers are connected.

Inputs:
1# Encoder 1-4

2# Encoder 5-8
3# Encoder Button 1-8

Outputs:
1# RED Shaft LED 1-8
2# GREEN shaft LED 1-8
3# BLUE shaft LED 1-8
4# LED Ring Row 1-8
5# LED Ring Selct 1-8
6# LED Ring Select 9-11

Assuming that the VLR-8Enc is the first device on the chain of J8/9 we need to configure it like this:
RESET_HW

LCD “%C”

Encoder configuration

ENC n= 1 sr=1 pins=0:1 type=detented2
ENC n= 2 sr=1 pins=2:3 type=detented2
ENC n= 3 sr=1 pins=4:5 type=detented2
ENC n= 4 sr=1 pins=6:7 type=detented2
ENC n= 5 sr=2 pins=0:1 type=detented2
ENC n= 6 sr=2 pins=2:3 type=detented2
ENC n= 7 sr=2 pins=4:5 type=detented2
ENC n= 8 sr=2 pins=6:7 type=detented2

LEDring configuration
DOUT_MATRIX n= 1 rows=16 mirrored_row=0 inverted_sel=1 sr_dout_sel1= 4 sr_dout_sel2= 0 sr_dout_r1= 5 sr_dout_r2= 6

Encoder events
EVENT_ENC id= 1 fwd_id=LED_MATRIX:1 type=CC chn= 1 cc= 24 lcd_pos=1:1:2 label=“^std_enc” LED_MATRIX_PATTERN=2
EVENT_ENC id= 2 fwd_id=LED_MATRIX:2 type=CC chn= 1 cc= 25 lcd_pos=2:1:2 label=“^std_enc” LED_MATRIX_PATTERN=2
EVENT_ENC id= 3 fwd_id=LED_MATRIX:3 type=CC chn= 1 cc= 26 lcd_pos=3:1:2 label=“^std_enc” LED_MATRIX_PATTERN=2
EVENT_ENC id= 4 fwd_id=LED_MATRIX:4 type=CC chn= 1 cc= 27 lcd_pos=4:1:2 label=“^std_enc” LED_MATRIX_PATTERN=2
EVENT_ENC id= 5 fwd_id=LED_MATRIX:5 type=CC chn= 1 cc= 28 lcd_pos=5:1:2 label=“^std_enc” LED_MATRIX_PATTERN=2
EVENT_ENC id= 6 fwd_id=LED_MATRIX:6 type=CC chn= 1 cc= 29 lcd_pos=6:1:2 label=“^std_enc” LED_MATRIX_PATTERN=2
EVENT_ENC id= 7 fwd_id=LED_MATRIX:7 type=CC chn= 1 cc= 30 lcd_pos=7:1:2 label=“^std_enc” LED_MATRIX_PATTERN=2
EVENT_ENC id= 8 fwd_id=LED_MATRIX:8 type=CC chn= 1 cc= 31 lcd_pos=8:1:2 label=“^std_enc” LED_MATRIX_PATTERN=2

Encoder Buttons

```
EVENT_BUTTON id=117 hw_id=17 fwd_id=LED:8 type=cc chn=1 cc=15 range=0:127
button_mode=OnOff lcd_pos=1:1:3 label="R^std_btn"
EVENT_BUTTON id=117 hw_id=17 fwd_id=LED:16 type=cc chn=1 cc=15 range=0:127
button_mode=OnOff lcd_pos=1:1:4 label="G^std_btn"
EVENT_BUTTON id=117 hw_id=17 fwd_id=LED:24 type=cc chn=1 cc=15 range=0:127
button_mode=OnOff lcd_pos=1:1:5 label="B^std_btn"

EVENT_BUTTON id=118 hw_id=18 fwd_id=LED:7 type=cc chn=1 cc=15 range=0:127
button_mode=OnOff lcd_pos=2:1:3 label="R^std_btn"
EVENT_BUTTON id=118 hw_id=18 fwd_id=LED:15 type=cc chn=1 cc=15 range=0:127
button_mode=OnOff lcd_pos=2:1:4 label="G^std_btn"
EVENT_BUTTON id=118 hw_id=18 fwd_id=LED:23 type=cc chn=1 cc=15 range=0:127
button_mode=OnOff lcd_pos=2:1:5 label="B^std_btn"

EVENT_BUTTON id=119 hw_id=19 fwd_id=LED:6 type=cc chn=1 cc=15 range=0:127
button_mode=OnOff lcd_pos=3:1:3 label="R^std_btn"
EVENT_BUTTON id=119 hw_id=19 fwd_id=LED:14 type=cc chn=1 cc=15 range=0:127
button_mode=OnOff lcd_pos=3:1:4 label="G^std_btn"
EVENT_BUTTON id=119 hw_id=19 fwd_id=LED:22 type=cc chn=1 cc=15 range=0:127
button_mode=OnOff lcd_pos=3:1:5 label="B^std_btn"

EVENT_BUTTON id=120 hw_id=20 fwd_id=LED:5 type=cc chn=1 cc=15 range=0:127
button_mode=OnOff lcd_pos=4:1:3 label="R^std_btn"
EVENT_BUTTON id=120 hw_id=20 fwd_id=LED:13 type=cc chn=1 cc=15 range=0:127
button_mode=OnOff lcd_pos=4:1:4 label="G^std_btn"
EVENT_BUTTON id=120 hw_id=20 fwd_id=LED:21 type=cc chn=1 cc=15 range=0:127
button_mode=OnOff lcd_pos=4:1:5 label="B^std_btn"

EVENT_BUTTON id=121 hw_id=21 fwd_id=LED:4 type=cc chn=1 cc=15 range=0:127
button_mode=OnOff lcd_pos=5:1:3 label="R^std_btn"
EVENT_BUTTON id=121 hw_id=21 fwd_id=LED:12 type=cc chn=1 cc=15 range=0:127
button_mode=OnOff lcd_pos=5:1:4 label="G^std_btn"
EVENT_BUTTON id=121 hw_id=21 fwd_id=LED:20 type=cc chn=1 cc=15 range=0:127
button_mode=OnOff lcd_pos=5:1:5 label="B^std_btn"

EVENT_BUTTON id=122 hw_id=22 fwd_id=LED:3 type=cc chn=1 cc=15 range=0:127
button_mode=OnOff lcd_pos=6:1:3 label="R^std_btn"
EVENT_BUTTON id=122 hw_id=22 fwd_id=LED:11 type=cc chn=1 cc=15 range=0:127
button_mode=OnOff lcd_pos=6:1:4 label="G^std_btn"
EVENT_BUTTON id=122 hw_id=22 fwd_id=LED:19 type=cc chn=1 cc=15 range=0:127
button_mode=OnOff lcd_pos=6:1:5 label="B^std_btn"

EVENT_BUTTON id=123 hw_id=23 fwd_id=LED:2 type=cc chn=1 cc=15 range=0:127
button_mode=OnOff lcd_pos=7:1:3 label="R^std_btn"
EVENT_BUTTON id=123 hw_id=23 fwd_id=LED:10 type=cc chn=1 cc=15 range=0:127
button_mode=OnOff lcd_pos=7:1:4 label="G^std_btn"
EVENT_BUTTON id=123 hw_id=23 fwd_id=LED:18 type=cc chn=1 cc=15 range=0:127
button_mode=OnOff lcd_pos=7:1:5 label="B^std_btn"

EVENT_BUTTON id=124 hw_id=24 fwd_id=LED:1 type=cc chn=1 cc=15 range=0:127
button_mode=OnOff lcd_pos=8:1:3 label="R^std_btn"
```

EVENT_BUTTON id=124 hw_id=24 fwd_id=LED:9 type=cc chn=1 cc=15 range=0:127 button_mode=OnOff lcd_pos=8:1:4 label="G^std_btn"
EVENT_BUTTON id=124 hw_id=24 fwd_id=LED:17 type=cc chn=1 cc=15 range=0:127 button_mode=OnOff lcd_pos=8:1:5 label="B^std_btn"

LED_MATRIX_PATTERN n=2 pos= 0 pattern=1111110000000000
LED_MATRIX_PATTERN n=2 pos= 1 pattern=0111110000000000
LED_MATRIX_PATTERN n=2 pos= 2 pattern=0011110000000000
LED_MATRIX_PATTERN n=2 pos= 3 pattern=0001110000000000
LED_MATRIX_PATTERN n=2 pos= 4 pattern=0001110000000000
LED_MATRIX_PATTERN n=2 pos= 5 pattern=0000110000000000
LED_MATRIX_PATTERN n=2 pos= 6 pattern=0000010000000000
LED_MATRIX_PATTERN n=2 pos= M pattern=0000111000010000
LED_MATRIX_PATTERN n=2 pos= 8 pattern=0000010000000000
LED_MATRIX_PATTERN n=2 pos= 9 pattern=0000011000000000
LED_MATRIX_PATTERN n=2 pos=10 pattern=0000011000000000
LED_MATRIX_PATTERN n=2 pos=11 pattern=0000011100000000
LED_MATRIX_PATTERN n=2 pos=12 pattern=0000011110000000
LED_MATRIX_PATTERN n=2 pos=13 pattern=0000011110000000
LED_MATRIX_PATTERN n=2 pos=14 pattern=0000011111000000

Im using my VLR-8oDisp board to show the Values of every item. You can change it to any other type of Display-setting... lcd_pos=6:1:5 {6=Display number : 1= X-axis : 5= Y-Axis (row)}

From:
https://wiki.midibox.org/ - **MIDIbox**

Permanent link:
https://wiki.midibox.org/doku.php?id=fadercore_-_vlr-8enc&rev=1406454994

Last update: **2014/07/27 09:56**