Konga Trigga

Konga > Mic > Preamp > Schmitt Trigger > uController + KeyboardNotes Input = Drum Triggerd Notes

Introduction

Features

- convert Microphone - Pulses to Midi-Drum/Melody-Retrigger
read also: Forum-link

Hardware Requirements

PCB:

- Audio PCB
- DipCoreF4 PCB
- UI PCB

Midibox:

- dipcoref4
- Soldering Iron, Wires, PCB....
- USB Power Supply

Schmitt-Trigger:

- TS-274 OP-Amp
- 14 Pin - DIP-Socket
- Pin-Header 2x5Pins (to connect the PCB to Core J5A)(you will also need a cable 4 that)
- Resistor R1 22K
- Resistor R2 4K7
- Resistor RFB 100K
- Resistor for Output-Gain-Reduction 100K
- 2x Electrolyt Capacitor 0,67uF (to decouple audio in and out)
- Electrolyt Capacitor 10uF for Supply
- Capacitor 100nF to denoise the OP-Amps-Rails...
- 2 Audio Cables+Sockets for the connection to the Recorder (6,3 mono jacks)

Firmware

V0.2018clk2a2clk.zip Fix Me! write code

Audio 2 Trigger

the basic shemata:

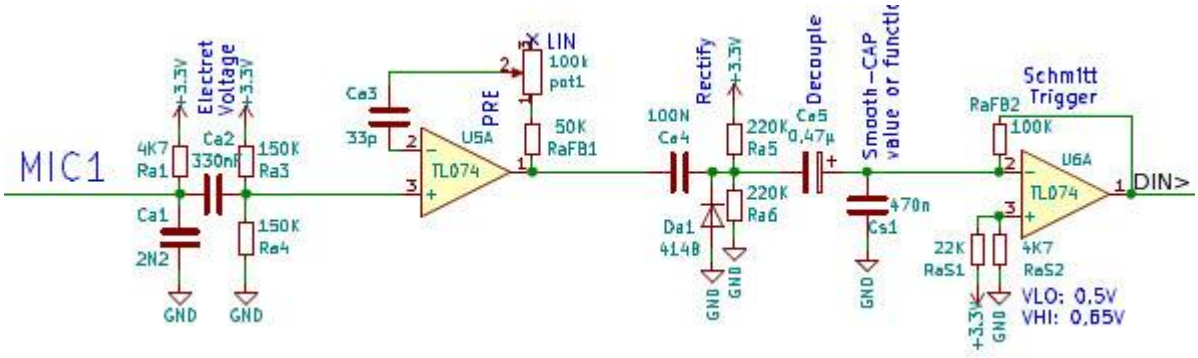

on Protoboard:

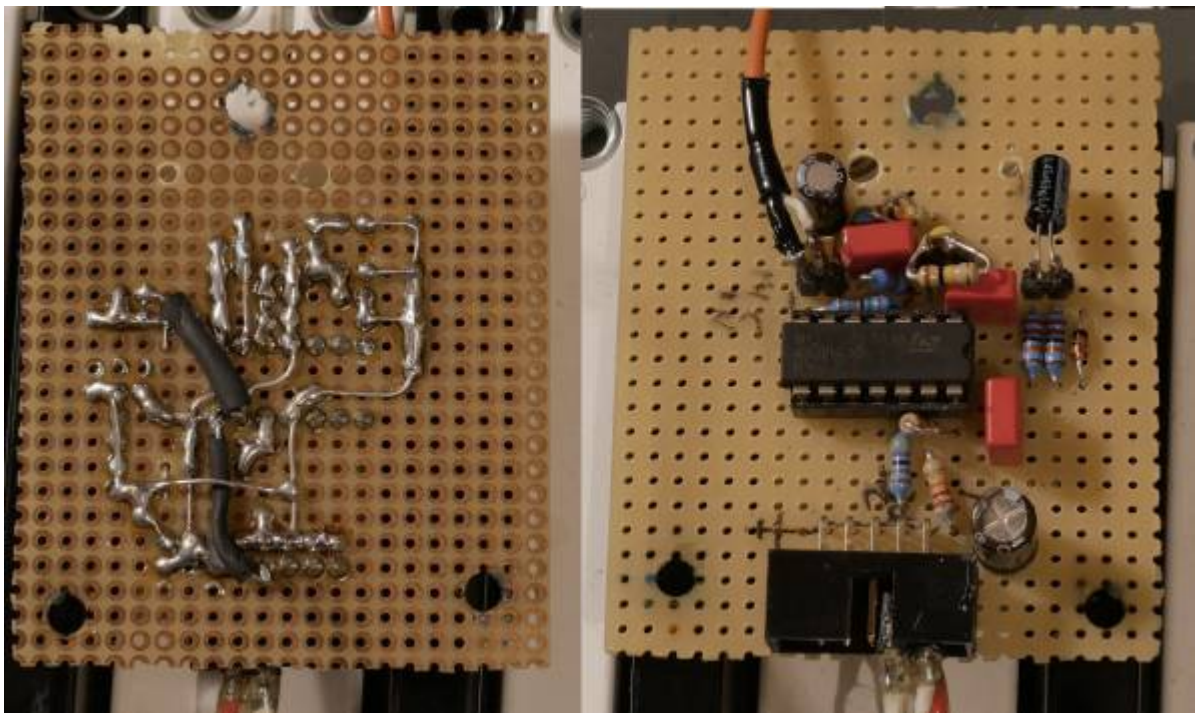

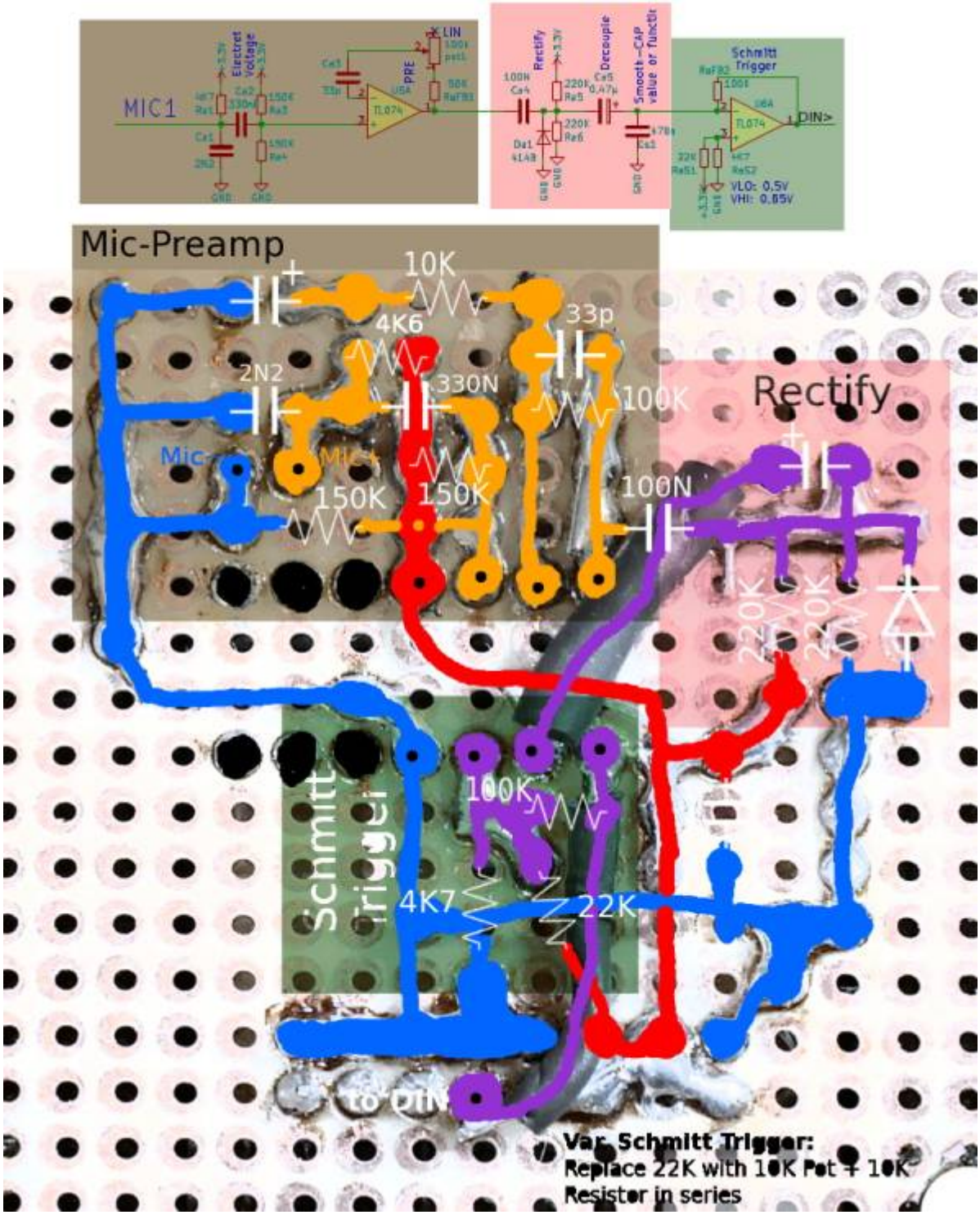

Firmware

Resources

Schmitt-Trigger-Calculator

Community users working on it

- **Phatline** = Programming, Documentation...

Just let a Private message on the forum to user already involved

From:
https://wiki.midibox.org/ - **MIDIbox**

Permanent link:
https://wiki.midibox.org/doku.php?id=kongatrigga&rev=1581052329

Last update: **2020/02/07 05:12**