

M16 MIDI Interface

Add 16 MIDI I/O to your Core, SPI Slave Interface with up to 16 UARTs(MIDI I/O), based on low-cost FPGA…

Features

- The FPGA internal clock works @88.67MHz.
- Fast 4 wires SPI in slave mode to control the board, 10Mb/s, 5V tolerant.
- Uses the default MIOS32_SPI_MIDI protocol, MIOS32 is ready-to-use with it.
- 16 UARTs on board, it's 16 MIDI ports.
- Each MIDI output has its own FIFO buffer of 1024 bytes, to queue the incoming MIDI from the SPI.
- Each MIDI output has its independent “Running Status”, with Disable/Enable Command from SPI.
- There's a 64 word(32bits) FIFO for out-coming messages from the board.
- 3 independents groups of 16 GPIOs, configurable and settable by SPI Command.
- Can be stacked under a dipBoardF4 mbhp

PCB

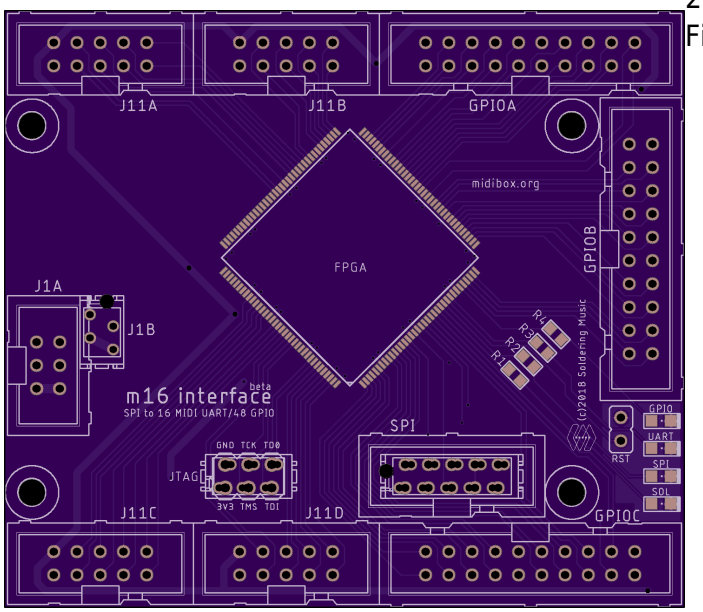

2 layers PCB design.
Fits 2 layer mostly common design rules.

- min. drill 10mil
- min. width 6mil

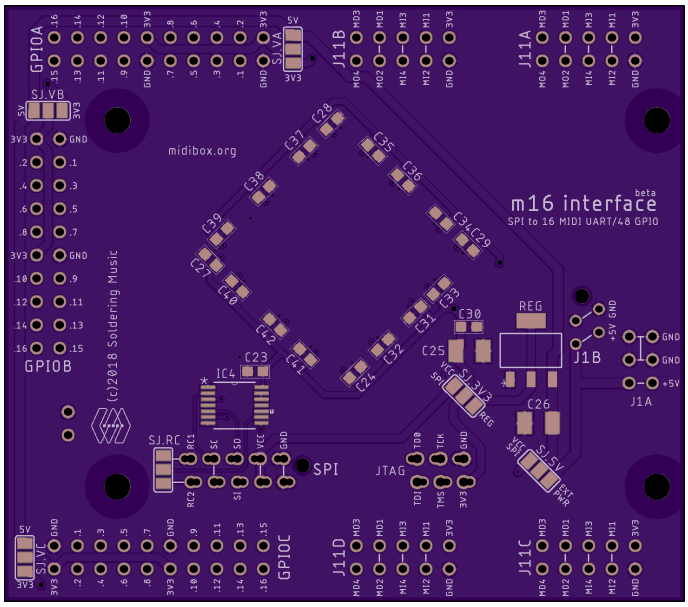

Dimension

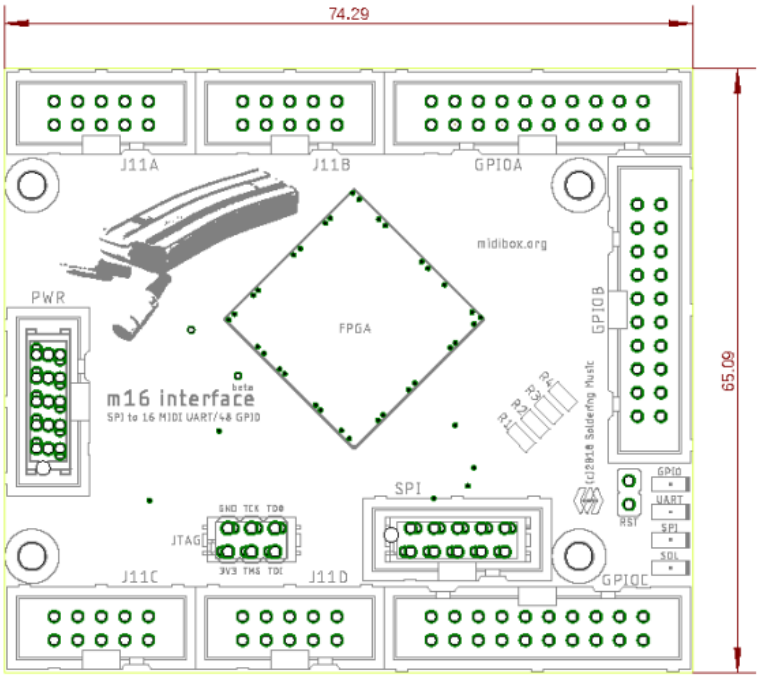

SPI Communication and protocol

This protocol is already implemented in MIOS32 as MIOS32_SPI_MIDI functions.

This is a SPI slave interface.
Host communication protocol is based on MMA Specification for USB communication.
MIDI data is carried in the packet in 32 bit MIDI Event. Most common MIDI messages are 2 or 3 bytes packed into one MIDI Event.
Longer messages, generally System Exclusive messages are carried in multiple MIDI Events. These MIDI Event provide a method to transfer MIDI messages with 32 bit fixed length messages to help memory allocation. This also makes parsing MIDI events easier by packetizing the separate bytes of a MIDI message into one parsed MIDI Event.
The first byte in each 32-bit MIDI Event is a sub-header containing a Port Index Number (4 bits) followed by a Code Index Number (4 bits). The remaining three bytes contain the actual MIDI event. Most typical parsed MIDI events are two or three bytes in length. Unused bytes are reserved and must be padded with zeros (in the case of a one- or two-byte MIDI event) to preserve the 32-bit fixed length of the MIDI Event.

The Code Index Number (CIN) indicates the classification of the bytes in the and the number of bytes in the message. The following table summarizes these classifications.

```
//! this global array is read from MIOS32_MIDI to
//! determine the number of MIDI bytes which are part of a package
const u8 mios32_midi_pcktype_num_bytes[16] = {
  0, // 0: invalid/reserved event
  0, // 1: local command
```

```
  2, // 2: two-byte system common messages like MTC, Song Select, etc.
  3, // 3: three-byte system common messages like SPP, etc.
  3, // 4: SysEx starts or continues
  1, // 5: Single-byte system common message or sysex sends with following
single byte
  2, // 6: SysEx sends with following two bytes
  3, // 7: SysEx sends with following three bytes
  3, // 8: Note Off
  3, // 9: Note On
  3, // a: Poly-Key Press
  3, // b: Control Change
  2, // c: Program Change
  2, // d: Channel Pressure
  3, // e: PitchBend Change
  1  // f: single byte

};
```

MIDI messages

Running status is never used, so all the messages are formed of all bytes. But the interface supports it, each MIDI Out can be individually set for that purpose.

Some examples

MIDI clock on port 7(SPIM0 to SPIM15)
MIDI message is 0xF8, cin = 0x5.
SPI message = 0x0000f875

```
    mios32_midi_package_t package;
    package.ALL = 0;
    package.cin = 0x5; // Single-byte system common message
    package.evnt0 = 0xf8; // MIDI Clock event status
    MIOS32_MIDI_SendPackage(SPIM7, package);
    // or directly
    MIOS32_MIDI_SendClock(SPIM7);
```

Note On on port 11
MIDI message is 0x90 0x2A 0x40, cin = 0x9.
SPI message = 0x402A90b9

```
    mios32_midi_package_t package;
    package.ALL = 0;
    package.cin = 0x9; // Single-byte system common message
    package.evnt0 = 0x90; // MIDI Note On event, channel 1
    package.evnt1 = 0x2A; // Note Number
```

```
    package.evnt2 = 0x40; // Velocity
    MIOS32_MIDI_SendPackage(SPIM11, package);
    // or directly
    MIOS32_MIDI_SendNoteOn(SPIM11, Chn1, 0x2A, 0x40)
```

System Exclusive on port 0
MIDI message is 0xF0 0x01 0x02 0x03 0x04 0x05 0xF7.
The stream will be divided in 3 packages:
SPI messages = 0x0101f004(SYSEX start), 0x05040304(SYSEX continues), 0x0000f705(SYSEX ends with one byte)

```
    mios32_midi_package_t package;
    package.ALL = 0;
    package.cin = 0x4; // Single-byte system common message
    package.evnt0 = 0xf0; // Start of Exclusive
    package.evnt1 = 0x01; // Data
    package.evnt2 = 0x02; // Data
    MIOS32_MIDI_SendPackage(SPIM0, package);
    package.evnt0 = 0x03; // Data
    package.evnt1 = 0x04; // Data
    package.evnt2 = 0x05; // Data
    MIOS32_MIDI_SendPackage(SPIM0, package);
    package.ALL = 0;
    package.cin = 0x4; // Single-byte system common message
    package.evnt0 = 0xf7; // End of Exclusive
    MIOS32_MIDI_SendPackage(SPIM0, package);
    // or directly
    u8 stream[7]={0xF0, 0x01, 0x02, 0x03, 0x04, 0x05, 0xF7};
    MIOS32_MIDI_SendSysex(SPIM0, (u8*)stream, 7);
```

Special command messages

The **m16** can receive some specifics commands and send back some status messages.
when **cin = 0x1**(local command), the **m16** will parse the message as a command and apply the requested change.

toDo
Some connection examples\\

In MIOS32

datasheet

From:
https://wiki.midibox.org/ - **MIDIbox**

Permanent link:
https://wiki.midibox.org/doku.php?id=m16&rev=1536406939

Last update: **2018/09/08 11:42**