

M16 MIDI Interface

Add 16 MIDI I/O to your Core, SPI Slave Interface with up to 16 UARTs(MIDI I/O), based on low-cost FPGA…

Features

- The FPGA internal clock works @88.67MHz.
- Fast 4 wires SPI in slave mode to control the board, 10Mb/s, 5V tolerant.
- Uses the default MIOS32_SPI_MIDI protocol, MIOS32 is ready-to-use with it.
- 16 UARTs on board, it's 16 MIDI ports.
- Each MIDI output has its own FIFO buffer of 1024 bytes, to queue the incoming MIDI from the SPI.
- Each MIDI output has its independent “Running Status”, with Disable/Enable Command from SPI.
- There's a 64 word(32bits) FIFO for out-coming messages from the board.
- 3 independents groups of 16 GPIOs, configurable and settable by SPI Command.
- Can be stacked under a dipBoardF4

PCB

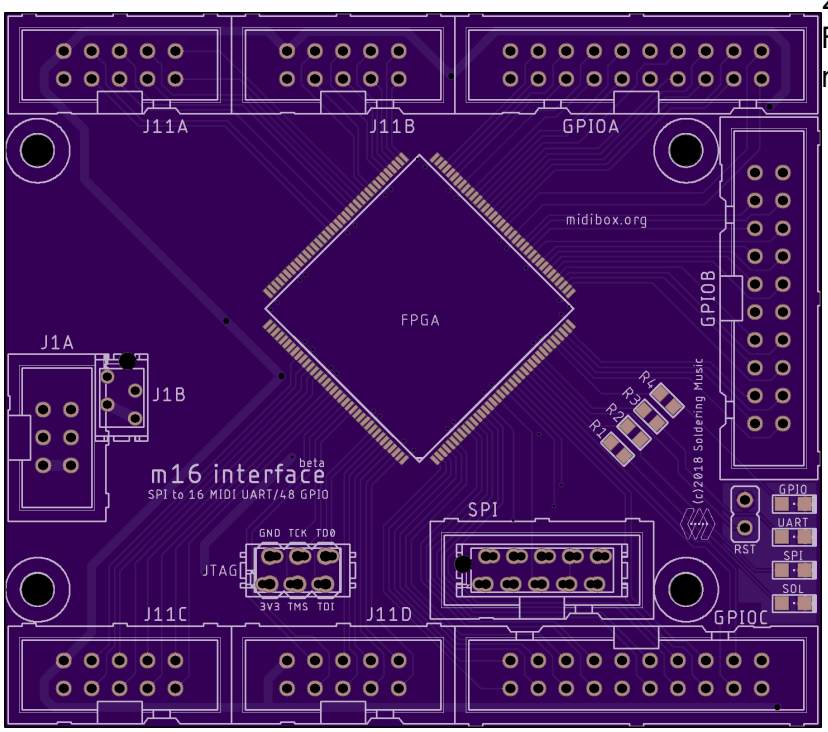

2 layers PCB design.
Fits 2 layer mostly common design rules.

- min. drill 10mil
- min. width 6mil

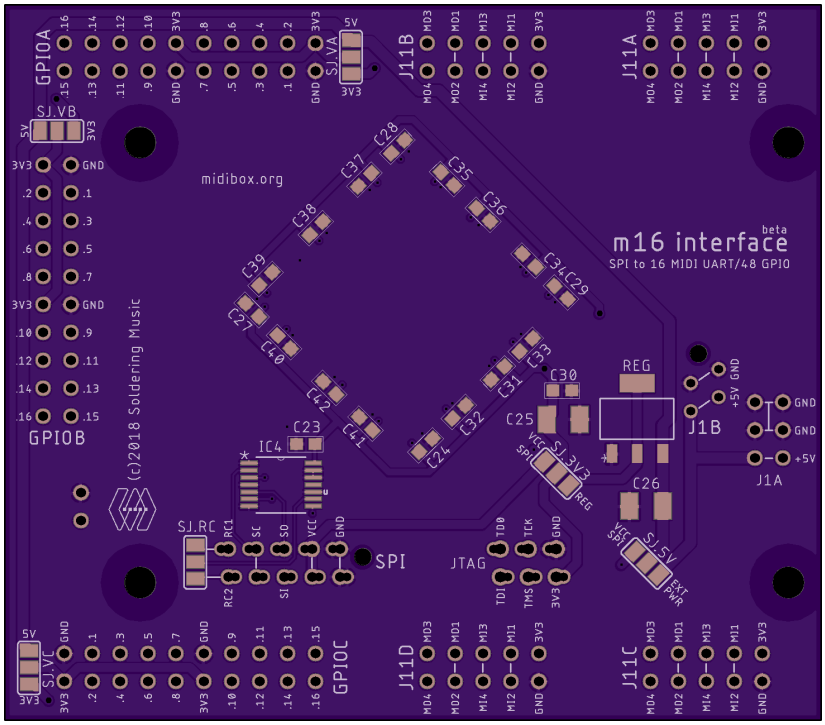

Dimension

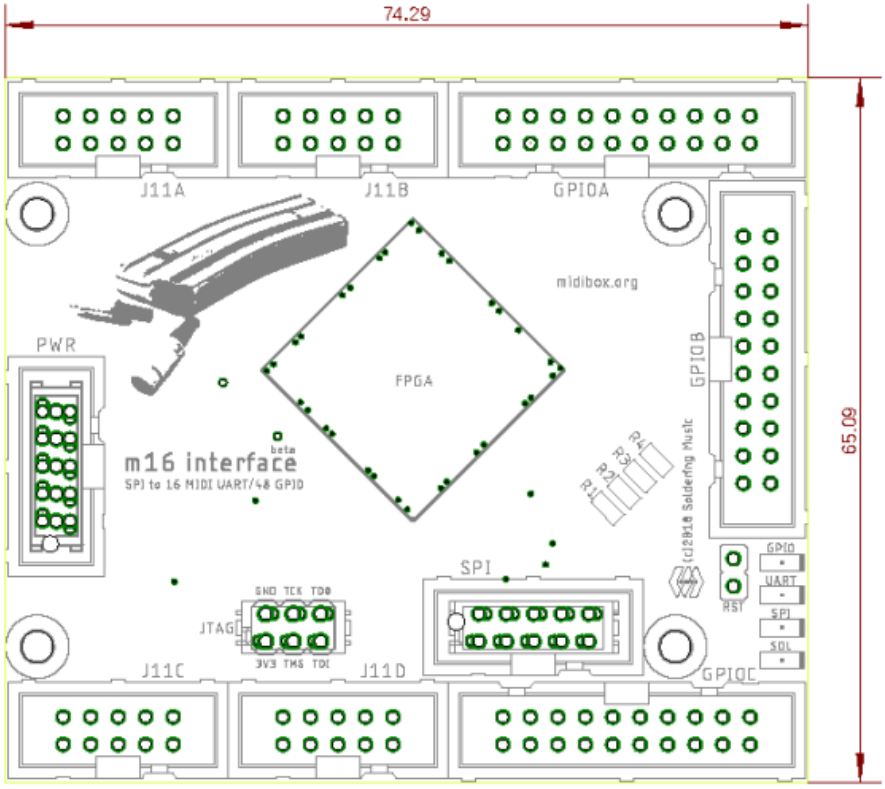

BOM

version 1. Mouser BOM:toDo

Qty	Value	Package	Parts	Mouser	Reichelt	Conrad	Other	Notes
Resistors								
1	100R 5%	0603	R3					
4	680R 5%	0603	R1, R2, R8, R9					Depends on Leds
4	10K 5%	0603	R4, R5, R6, R7					
1	100K 5%	0603	R11					
PTC fuses, resettable thermistors								
1	1206L150THWR	1206	F1	576-1206L150THWR				
Capacitors								
2	20p	0603	C12, C13					

Qty	Value	Package	Parts	Mouser	Reichelt	Conrad	Other	Notes
Resistors								
9	100n	0603	C2, C5, C6, C7, C8, C9, C14, C15, C16					
3	2,2u	0603	C4, C10, C11					
1	10u	SMC_A	C3					
1	47u	SMC_B	C1					
Crystal								
1	8MHz	3.2×2.5_KX-7	Q1	oups! Not easy to find :(				will be changed...
LEDs								
4	–	0805	5V, 3V3, L1, L2					
ICs								
1	STM32F405RG	LQFP64	IC1	511-STM32F405RGT6				
1	74HCT541	TSSOP20	IC2	771-74HCT541PW-T				
1	LD1117AS33TR	SOT223	REG	511-LD1117AS33				
Switches								
2	Micro Switches	KMR2 4.6×2.8	RESET, USER	611-KMR221NGLFS				SMT Tact Switches
Headers								
3	1*20	male		649-68000-420HL				Termination Post Length max 2.57mm
Connnector								
1	mini-USB	THT	USB	571-1734510-1				for other ref take care about restricted area!

SPI Communication and protocol

This protocol is already implemented in MIOS32 as MIOS32_SPI_MIDI functions.

This is a SPI slave interface.
Host communication protocol is based on MMA Specification for USB communication.
MIDI data is carried in the packet in 32 bit MIDI Event. Most common MIDI messages are 2 or 3 bytes

packed into one MIDI Event.
Longer messages, generally System Exclusive messages are carried in multiple MIDI Events. These MIDI Event provide a method to transfer MIDI messages with 32 bit fixed length messages to help memory allocation. This also makes parsing MIDI events easier by packetizing the separate bytes of a MIDI message into one parsed MIDI Event.
The first byte in each 32-bit MIDI Event is a sub-header containing a Port Index Number (4 bits) followed by a Code Index Number (4 bits). The remaining three bytes contain the actual MIDI event. Most typical parsed MIDI events are two or three bytes in length. Unused bytes are reserved and must be padded with zeros (in the case of a one- or two-byte MIDI event) to preserve the 32-bit fixed length of the MIDI Event.

The Code Index Number (CIN) indicates the classification of the bytes in the and the number of bytes in the message. The following table summarizes these classifications.

```
//! this global array is read from MIOS32_MIDI to
//! determine the number of MIDI bytes which are part of a package
const u8 mios32_midi_pcktype_num_bytes[16] = {
  0, // 0: invalid/reserved event
  0, // 1: local command
  2, // 2: two-byte system common messages like MTC, Song Select, etc.
  3, // 3: three-byte system common messages like SPP, etc.
  3, // 4: SysEx starts or continues
  1, // 5: Single-byte system common message or sysex sends with following
single byte
  2, // 6: SysEx sends with following two bytes
  3, // 7: SysEx sends with following three bytes
  3, // 8: Note Off
  3, // 9: Note On
  3, // a: Poly-Key Press
  3, // b: Control Change
  2, // c: Program Change
  2, // d: Channel Pressure
  3, // e: PitchBend Change
  1  // f: single byte

};
```

MIDI messages

Running status is never used, so all the messages are formed of all bytes. But the interface supports it, each MIDI Out can be individually set for that purpose.

Some examples

MIDI clock on port 7(SPIM0 to SPIM15)
MIDI message is 0xF8, cin = 0x5.

SPI message = 0x0000f875 (Less significant byte first)

```
    mios32_midi_package_t package;
    package.ALL = 0;
    package.cin = 0x5; // Single-byte system common message
    package.evnt0 = 0xf8; // MIDI Clock event status
    MIOS32_MIDI_SendPackage(SPIM7, package);
    // or directly
    MIOS32_MIDI_SendClock(SPIM7);
```

Note On on port 11
MIDI message is 0x90 0x2A 0x40, cin = 0x9.
SPI message = 0x402A90b9

```
    mios32_midi_package_t package;
    package.ALL = 0;
    package.cin = 0x9; // Single-byte system common message
    package.evnt0 = 0x90; // MIDI Note On event, channel 1
    package.evnt1 = 0x2A; // Note Number
    package.evnt2 = 0x40; // Velocity
    MIOS32_MIDI_SendPackage(SPIM11, package);
    // or directly
    MIOS32_MIDI_SendNoteOn(SPIM11, Chn1, 0x2A, 0x40)
```

System Exclusive on port 0
MIDI message is 0xF0 0x01 0x02 0x03 0x04 0x05 0xF7.
The stream will be divided in 3 packages:
SPI messages = 0x0101f004(SYSEX start), 0x05040304(SYSEX continues), 0x0000f705(SYSEX ends with one byte)

```
    mios32_midi_package_t package;
    package.ALL = 0;
    package.cin = 0x4; // Single-byte system common message
    package.evnt0 = 0xf0; // Start of Exclusive
    package.evnt1 = 0x01; // Data
    package.evnt2 = 0x02; // Data
    MIOS32_MIDI_SendPackage(SPIM0, package);
    package.evnt0 = 0x03; // Data
    package.evnt1 = 0x04; // Data
    package.evnt2 = 0x05; // Data
    MIOS32_MIDI_SendPackage(SPIM0, package);
    package.ALL = 0;
    package.cin = 0x4; // Single-byte system common message
    package.evnt0 = 0xf7; // End of Exclusive
    MIOS32_MIDI_SendPackage(SPIM0, package);
    // or directly
    u8 stream[7]={0xF0, 0x01, 0x02, 0x03, 0x04, 0x05, 0xF7};
    MIOS32_MIDI_SendSysex(SPIM0, (u8*)stream, 7);
```

Special command messages

The **m16** can receive some specifics commands and send back some status messages.
when **CIN=0x1**(local command), the **m16** will parse the message as a command and apply the requested change.

- Port(Cable)value becomes Group Command Code(GCC).
- evnt0 is the command number(CMD.
- evnt1 and evnt2 are the value bytes.

List of the commands:

byte(0)		byte(1)	byte(2) byte(3)	Command	Status
GCC(bit7-4)	CIN(bit 3-0)	evnt0(CMD)	evnt1 evnt2		
0x0(system config)	always 0x1 (local command)	0x01	0xXXXX	UART fifo source. 0x0000: SPI is the source else UART(loopback)	
		0x02	0xXXXX	SPI fifo source. 0x0000: UART is the source else SPI(loopback)	
		0X03	0xXXXX	SPI miso send MIDI In Activity status. 0x0000: Off else On	0xXXXX are the 16 status bits(sent on change every poll)
		0X04	0xXXXX	SPI miso send MIDI Out Activity status. 0x0000: Off else On	0xXXXX are the 16 status bits(sent on change every poll)
		0X05	0xXXXX	SPI miso send MIDI Out Overload status. 0x0000: Off else On	0xXXXX are the 16 status bits(sent on change every poll)
0x1(MIDI config)	always 0x1 (local command)	0x01	0xXXXX	MIDI Running Status Enabler(1 bit by MIDI Out port), default is 0xffff(all enabled)	
0xa(GPIOA params)	always 0x1 (local command)	0x01	0xXXXX	GPIOA Mode(default is 0x00). -- 0x00: group is MIDI In Activity -- 0x01: group is MIDI Out Activity -- 0x02: group is MIDI Out Overload -- 0x03: group is 16 General Purpose Outputs -- 0x04: group is16 General Purpose Inputs	when in mode=0x04(GPI) 0xXXXX are the 16 GPI value bits(sent on change every poll) and inverted depending on Inverter buffer.
		0x02	0xXXXX	Inverter buffer(1 bit for each pin). If 1 value is inverted. Defaut is 0xffff(all inverted)	
		0x03	0xXXXX	buffer for the 16 General Purpose Outputs when Mode=0x03(GPO)	
0xb(GPIOB params)	always 0x1 (local command)	0x01	0xXXXX	GPIOB Mode(default is 0x01). -- 0x00: group is MIDI In Activity -- 0x01: group is MIDI Out Activity -- 0x02: group is MIDI Out Overload -- 0x03: group is 16 General Purpose Outputs -- 0x04: group is16 General Purpose Inputs	when in mode=0x04(GPI) 0xXXXX are the 16 GPI value bits(sent on change every poll) and inverted depending on Inverter buffer.
		0x02	0xXXXX	Inverter buffer(1 bit for each pin). If 1 value is inverted. Defaut is 0xffff(all inverted)	
		0x03	0xXXXX	buffer for the 16 General Purpose Outputs when Mode=0x03(GPO)	
0xc(GPIOC params)	always 0x1 (local command)	0x01	0xXXXX	GPIOC Mode(default is 0x02). -- 0x00: group is MIDI In Activity -- 0x01: group is MIDI Out Activity -- 0x02: group is MIDI Out Overload -- 0x03: group is 16 General Purpose Outputs -- 0x04: group is16 General Purpose Inputs	when in mode=0x04(GPI) 0xXXXX are the 16 GPI value bits(sent on change every poll) and inverted depending on Inverter buffer.
		0x02	0xXXXX	Inverter buffer(1 bit for each pin). If 1 value is inverted. Defaut is 0xffff(all inverted)	
		0x03	0xXXXX	buffer for the 16 General Purpose Outputs when Mode=0x03(GPO)	

With System commands, you will be able to

- Put SPI or UARTs in loopback for testing purpose.
- Enable MIDI activity status messages over SPI(MISO).

There's only one MIDI configuration command, dedicated to UARTs TX(MIDI Out) Running Status enabler.

With GPIOx commands, you can configure and set the GPIO ports.

toDo
Some connection examples\\

In MIOS32

datasheet

From:
https://wiki.midibox.org/ - **MIDIbox**

Permanent link:
https://wiki.midibox.org/doku.php?id=m16&rev=1538811720

Last update: **2018/10/06 07:42**