MIDIbox RGB-LED Matrix 8x8

The RGB LED matrix described here can be used to signal feedback to the user, as for example in my MIDI Matrix with 56 Inputs and 56 Outputs. But, it can also be used for fancy stuff, Vegas mode, bling, impressing your neighbours,...

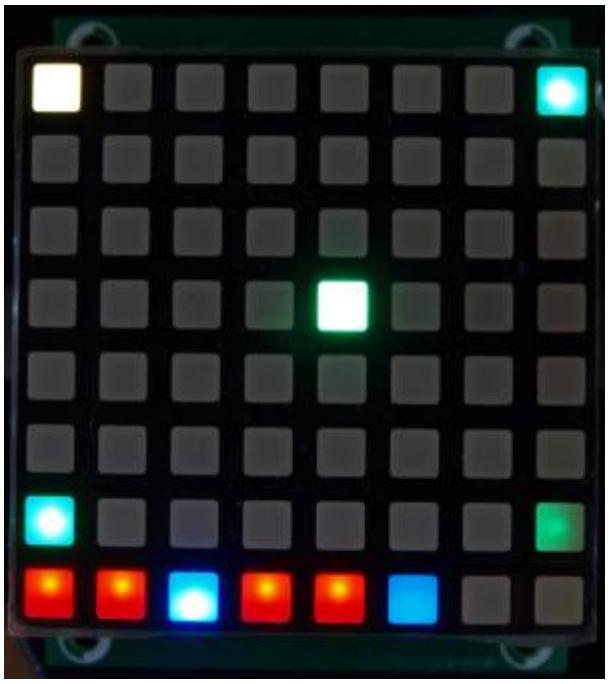

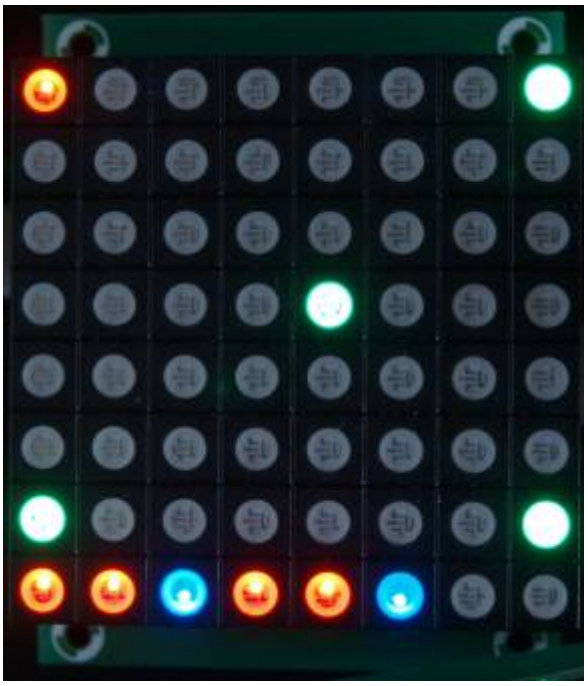

Overview

The PCB is as wide as the RGB LED modules themselves, with enough space above and below for mounting holes. This means that the modules can easily be chained horizontally in order to create type crawls. If you cut off the top and bottom mounting holes along the line that is printed on the PCB then you can also create larger screens extending in two dimensions.

It consists of 4 DOUT shift registers (74HC595) that feed the RGB LED display module in a matrix style. It is connected to J8/J9 of the core board. In order to access the RGB LEDs, use the BLM-X module which makes it straightforward to access single colors / single LEDs in the matrix.

Schematic

The schematic is simply a reproduction of the DOUTx4 board with the RGB-LED module connected in the correct way. Download the schematic of the MIDIbox RGB-LED Matrix here.

Layout

A minimal size PCB has been created to allow easy cascading of modules.

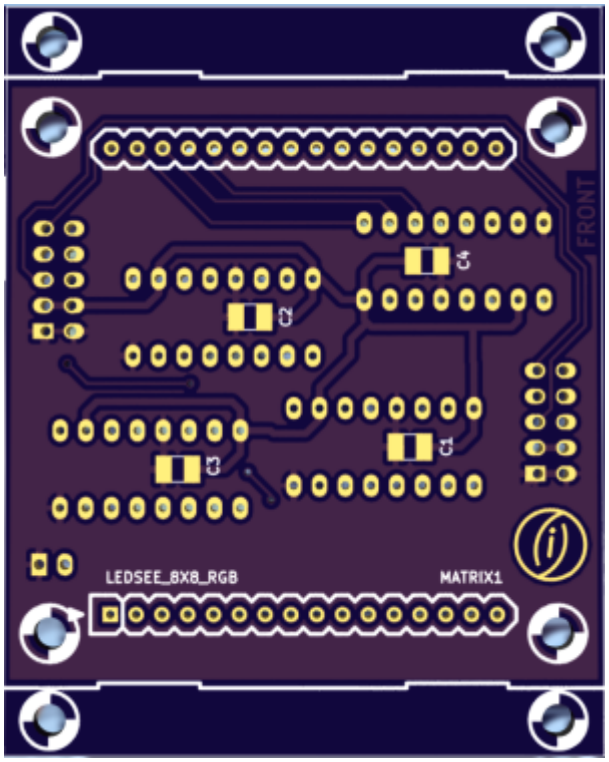

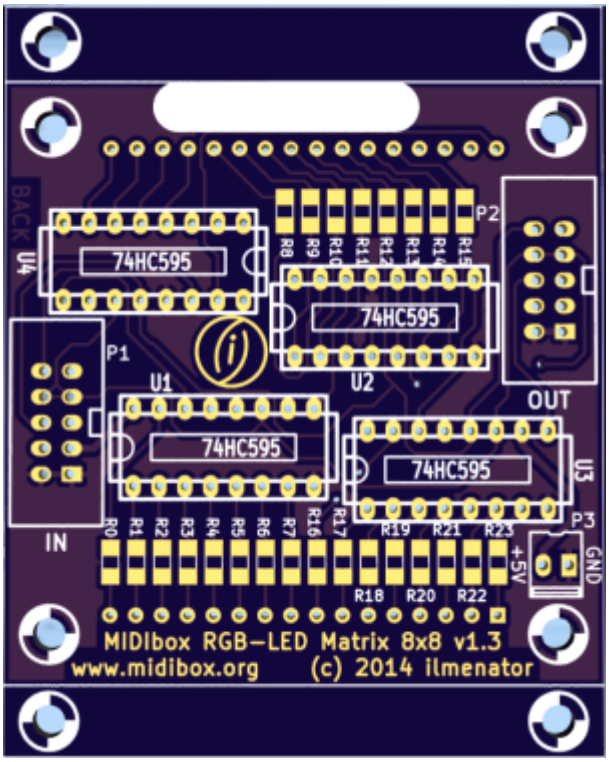



Where to buy?

If you are interested in building this, send a personal message (PM) to user *ilmenator* over at the MIDIbox forum (you have to register to be able to send PM). As of summer 2014, I have PCBs available for 5€ each, as well as semi-kits for those having difficulties sourcing the parts (SMD parts and RGB LED modules) themselves.

BOM

Reference	Description	Package	Value	Quantity	Mouser	Reichelt
C1 - C4	capacitor	SM1210	100n	4		
R1 - R24	1/4W resistor	SM1206	100	24		SMD 1/4W 100
U1 - U4	shift register	DIP-16	74HC595	4		74HC595
	IC socket	DIL-16		4		GS 16
P1, P2	IDC connector	5×2		2		WSL 10
MATRIX1	RGB LED module	60x60mm		1		
	SIL precision sockets	16 pins		2		

An additional 5V power connector (P3) is not necessary. The RGB LED matrix modules can be found in various variants, e.g. with round or square LEDs. They should follow the specifications defined in this document.

From:
https://wiki.midibox.org/ - **MIDIbox**

Permanent link:
https://wiki.midibox.org/doku.php?id=mb_rgb-led_matrix_8x8&rev=1407176600

Last update: **2014/08/04 18:23**