MB Sync24 converter

Sync24 is (was) used by Roland, to syncronise machines before the midi became popular.

Basicaly, it's just a “pulse clock sync” at 24ppqn (24 pules per quarter note)

This converter help to sync your Roland Tb-303 Tr-606 Tr-808 to sync with midi, or to sync your apeggio (sh-101 / juno60 etc..)

Such a device allready exist and is distributed by :

- doepfer http://www.doepfer.de/msy2.htm
- kenton http://www.dv247.fr/invt/11643/
- etc http://www.philrees.co.uk/products/sync-if.htm

but it's often pretty expensive. (From 50 to 100euro)

Now, you can build your own for much less.

It's working both ways :

1. Midi clock to Sync24 (the most often this is what you want)
2. Sync24 to Midi clock

The hardware

It is made of :

1. A core module
2. A dout module (if you want to convert Midi → Sync24)
3. A din module + a lil board (if you want to convert Sync24 → Midi)

(i will describe this part later, because i must improve it)

```
You dont need a screen, so it can works with batteries for quite a long
time.
```

Sync24 Connector

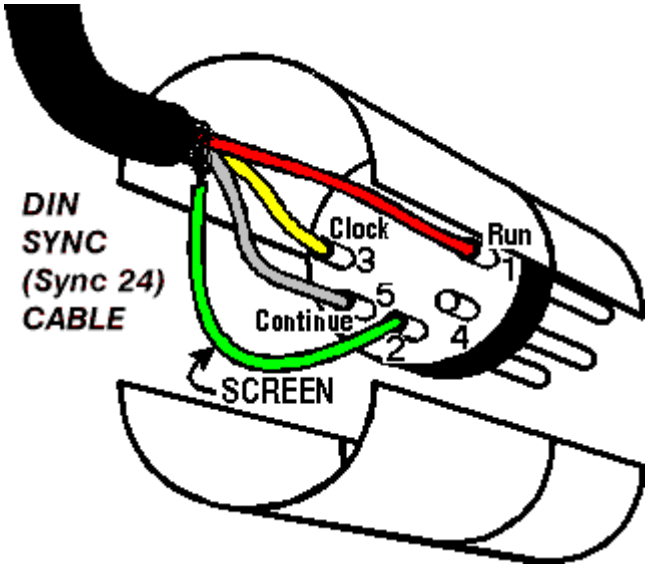

Sync24 Connectors Are Not MIDI Cables

Dont use midi cables as sync24 cables, because the wiring is different, and most often, the pins 1 and 5 used by sync 24 are left unwired in midi cables.

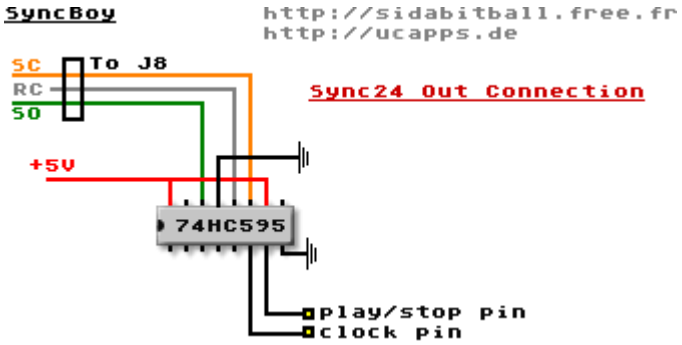

The program

Is still beta, but working fine. It's tested in both directions with :

1. TR626 (midi),
2. Yamaha RM1X (midi),
3. TR909 (midi AND sync24)
4. TR808 (sync24)
5. TR606 (sync24)
6. TB303 (sync24)
7. Nintendo Gameboy running LSDJ ('kind of' sync24)
8. MidiOX :)

Get it here : http://sidabitball.free.fr/cli/sync_boy/MB-sync0.7.zip (Link was temporarly offline!!)

From:
https://wiki.midibox.org/ - **MIDIbox**

Permanent link:
https://wiki.midibox.org/doku.php?id=mb_sync24

Last update: **2011/09/09 02:54**