The MBHP_4066 Board

For MIDIfying old analog Sound gear You'll need bilateral switches in some cases.

In my case I needed more than 100 of them!

For that reason I created the **MBHP_4066** board.

One MBHP_4066 board provides 16 bilateral switches.

For more Information have a look of the pdf file below.

Thanks for the engaged support **nILS** and **PCB Mike**!

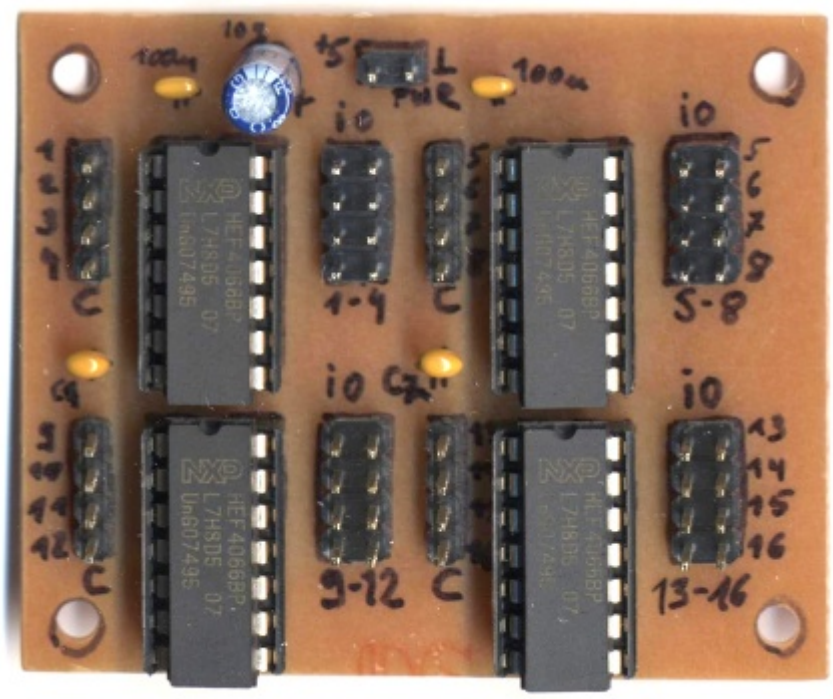

The MBHP_4066 Board (assembled)

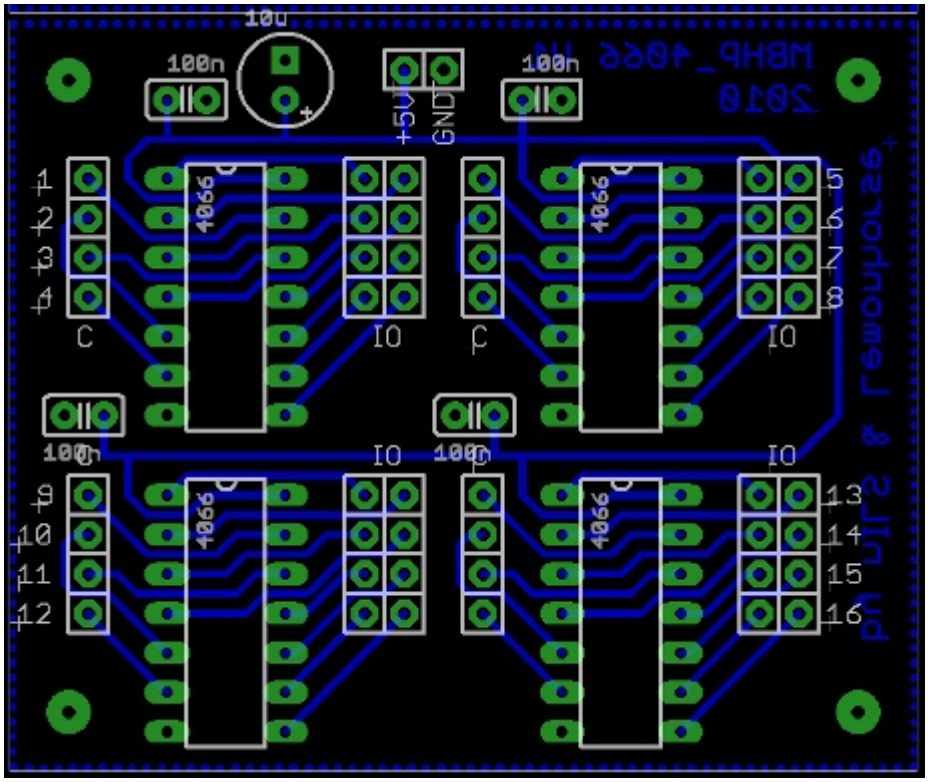

The MBHP_4066 Board (PCB, Eagle)

Overview and Details:

- **MBHP_4066** with remarks and a Partlist ==⇒ http://www.subfrequenz.net/midibox/vss200/mbhp4066v1/MBHP4066V1.pdf
- Mike will provide the MBHP_4066 board in his Onlineshop ==⇒ http://www.mikes-elektronikseite.de/mshop_englisch/
- 4066 Datasheet (found no better source yet) ==⇒ http://pdf1.alldatasheet.com/datasheet-pdf/view/8175/NSC/4066.html

- Lemonhorse (28.05.2010)

From:
https://wiki.midibox.org/ - **MIDIbox**

Permanent link:
https://wiki.midibox.org/doku.php?id=mbhp4066&rev=1275080567

Last update: **2010/05/28 21:02**