MIDIBox AY (YM) Boards

AY 3 8912 board

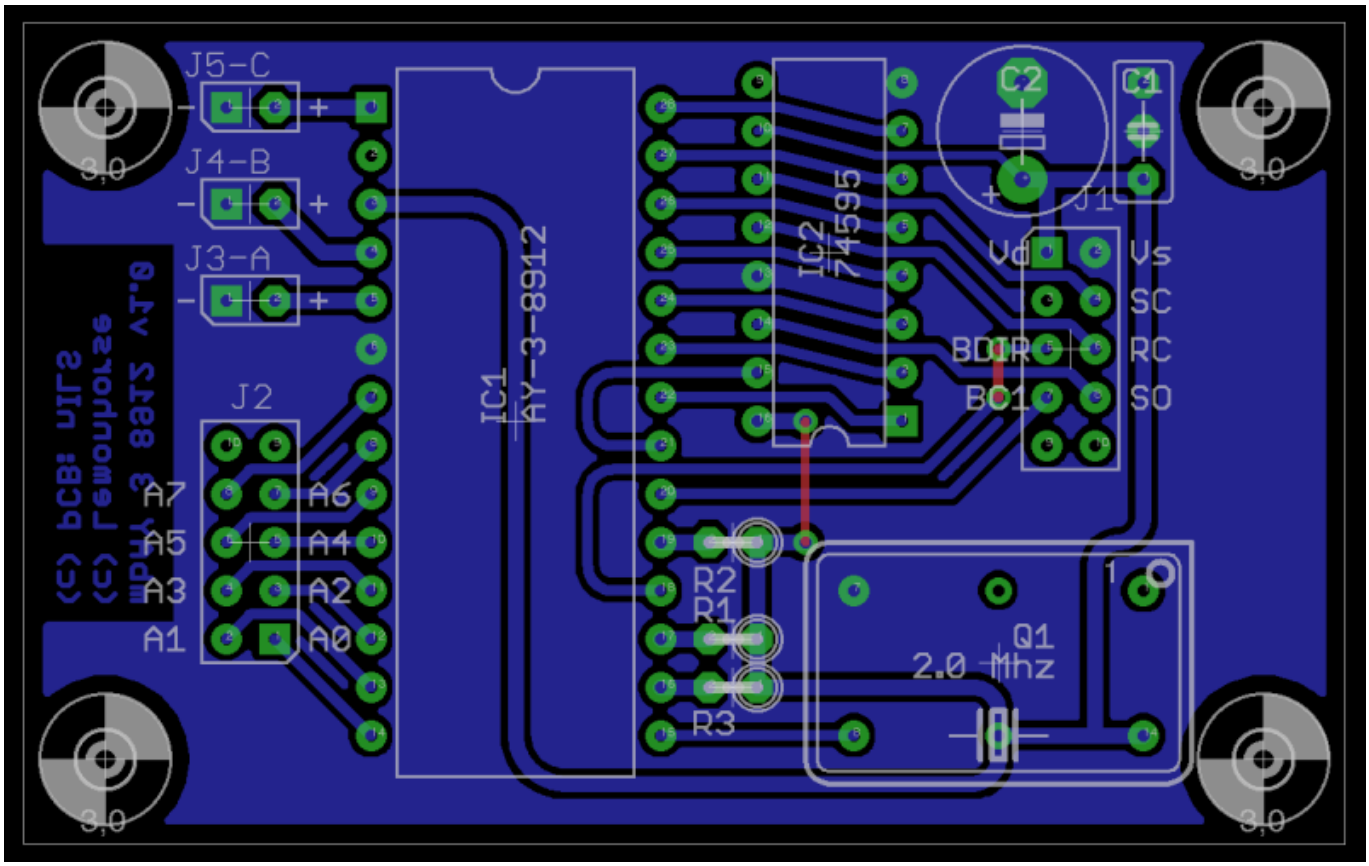

Note: SO = SERIAL IN (SI)

::

:

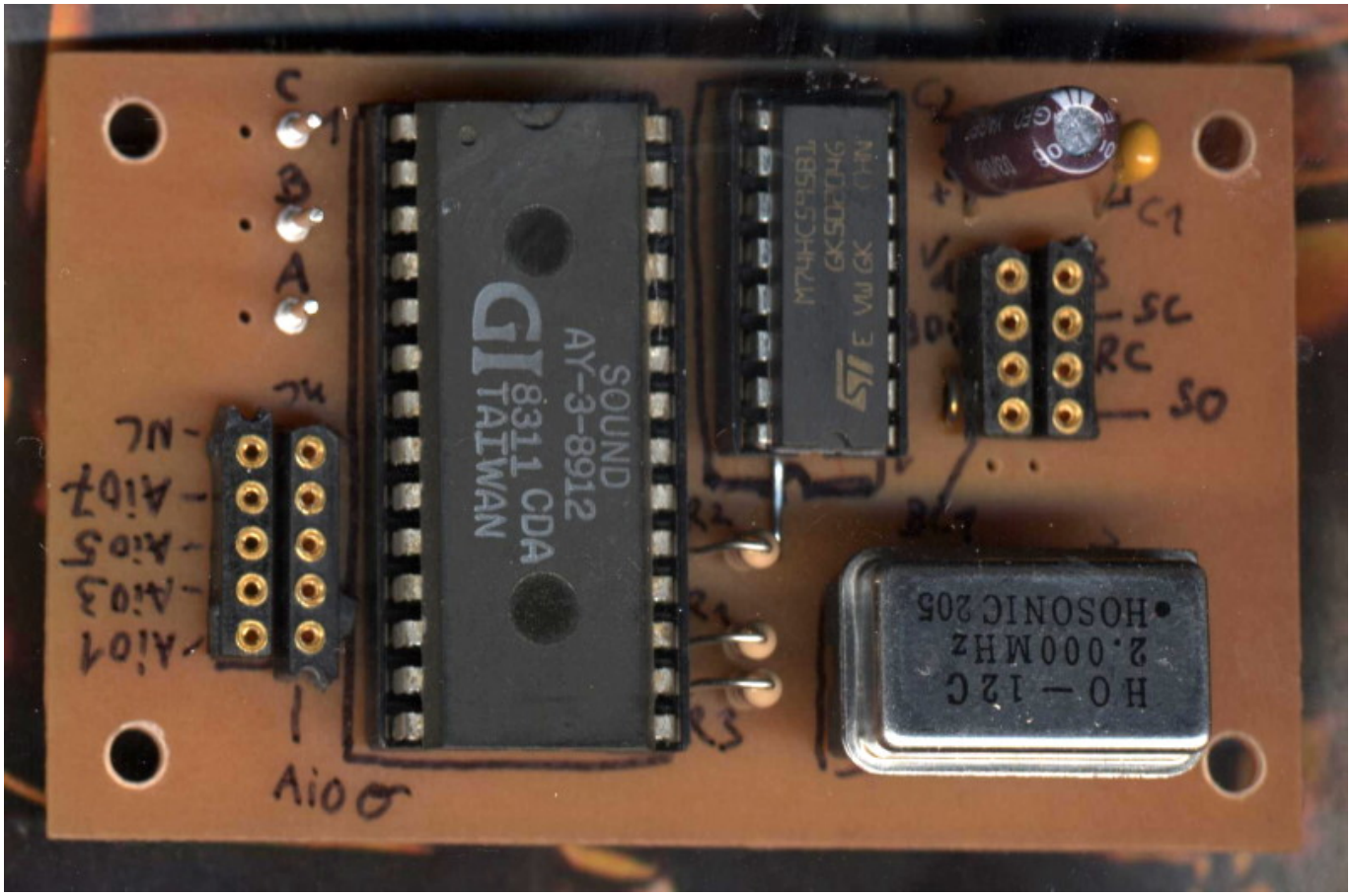

Note: SO = SERIAL IN (SI)

::

:

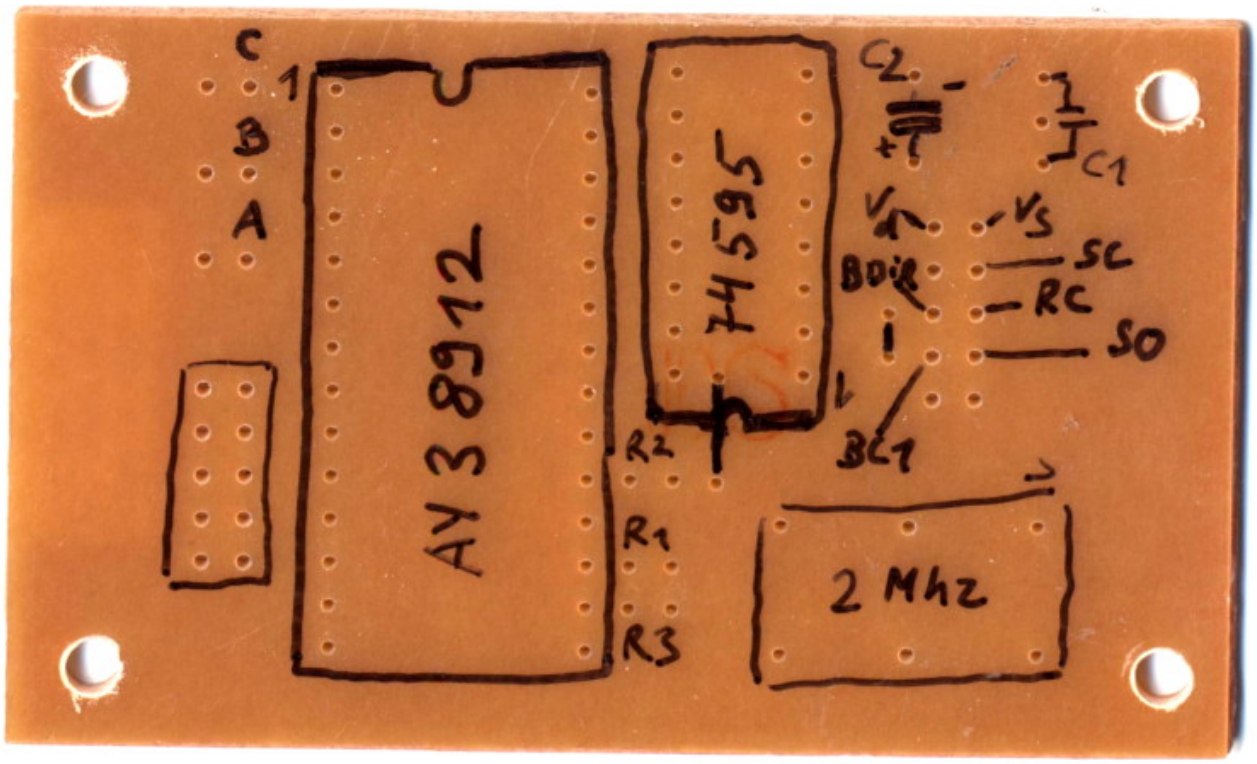

Note: SO = SERIAL IN (SI) - and don't forget the 2 bridges! :)

::

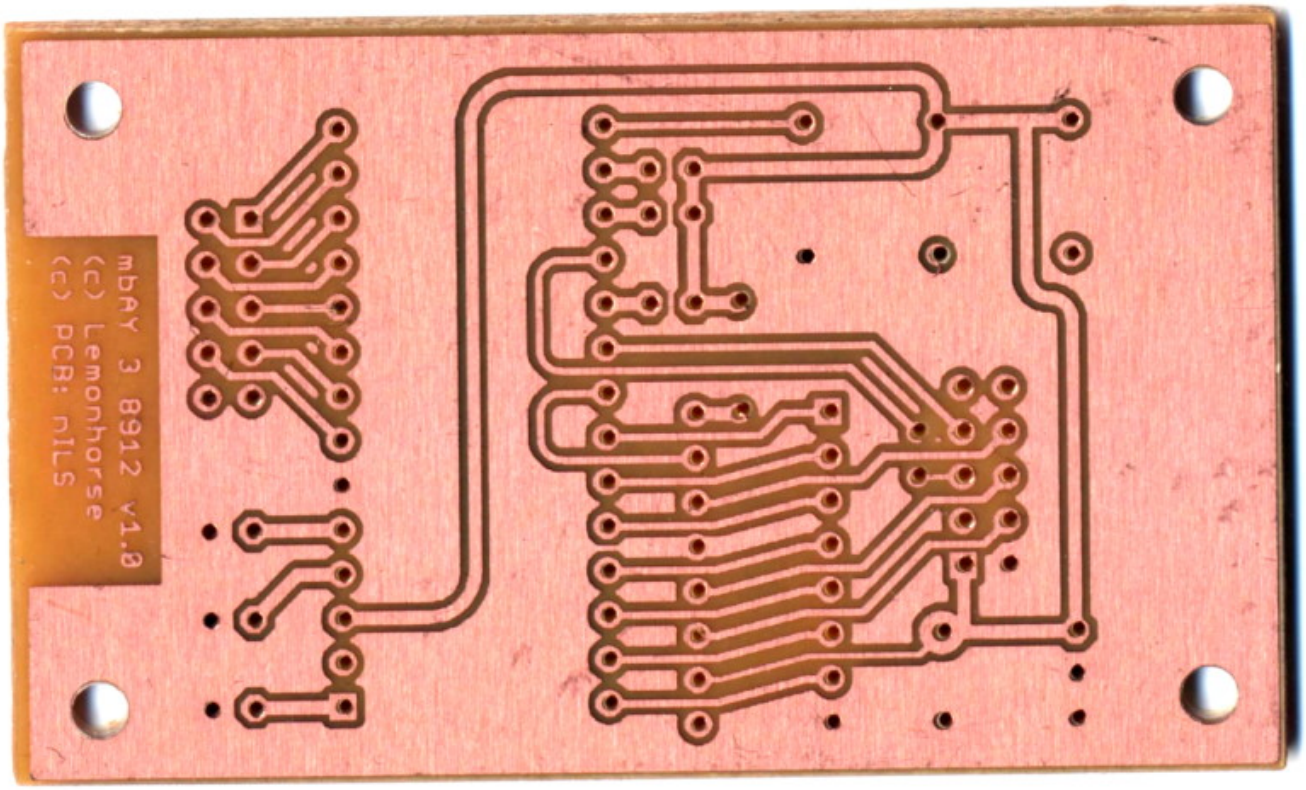

MB AY (YM) Interconnections: ⇒ http://www.subfrequenz.net/midibox/mbayv2/mbayv2con.pdf

::

:

YM2149 Board

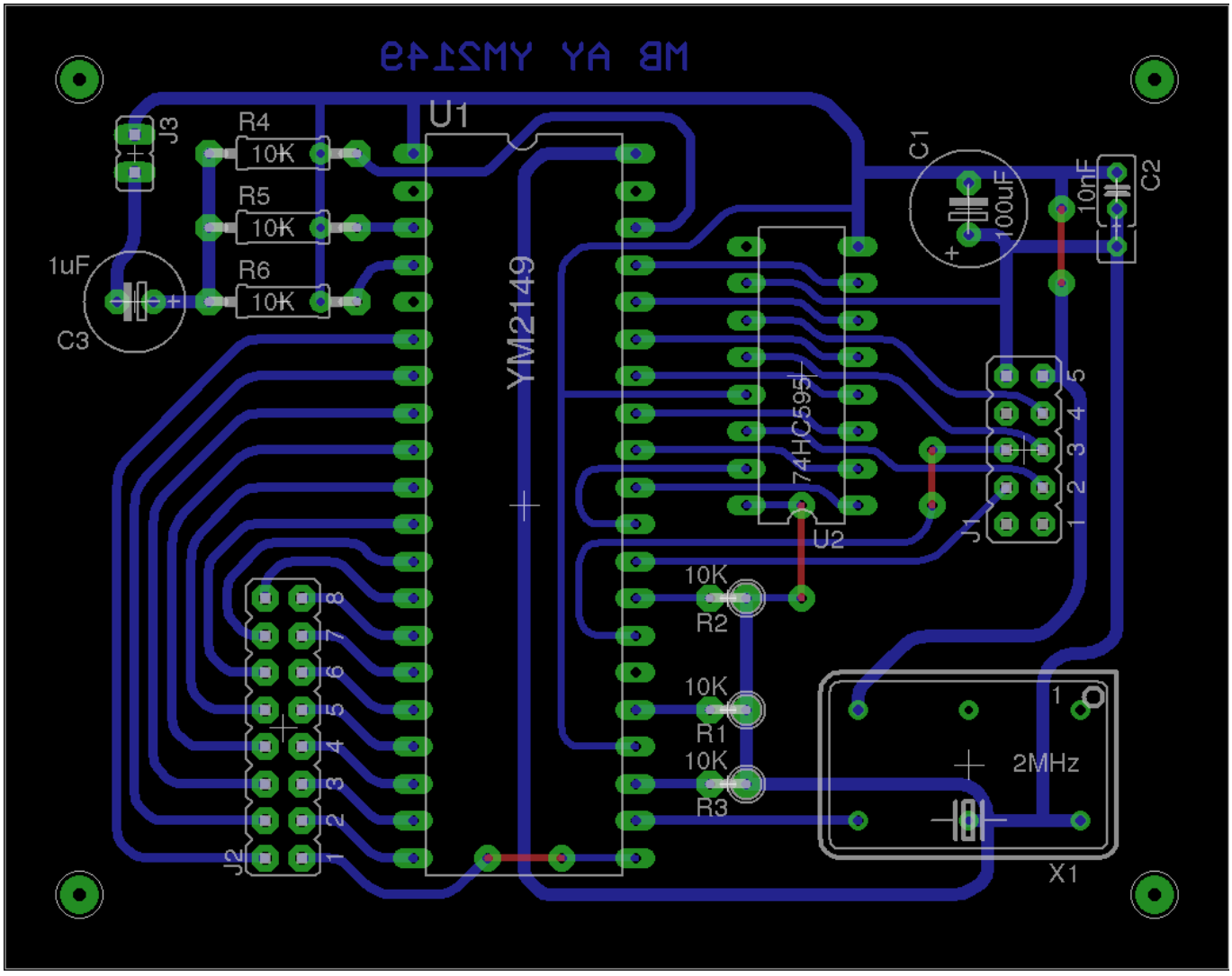

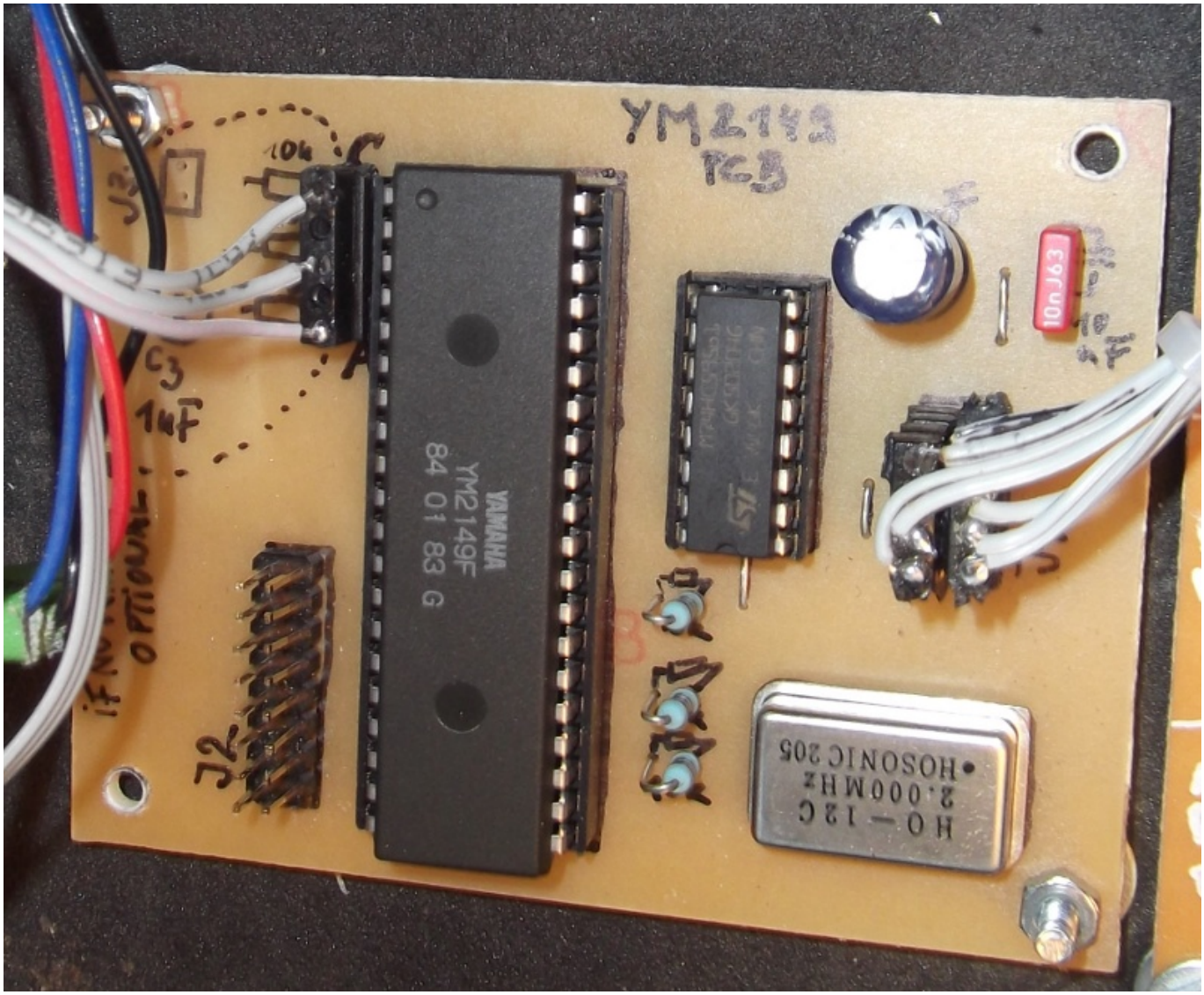

PCB Layout (pdf)

mbAY38912.pdf

::

:

Parts List

mbay38912pcbpartlistv1.txt

::

:

PCB

The AY 3 8912 PCB and the AY 3 8912 OP-Mixer PCB are available at Mikes Onlineshop

http://www.mikes-elektronikseite.de/shop_englisch/index.htm

[26.09.2008]

From:
https://wiki.midibox.org/ - **MIDIbox**

Permanent link:
https://wiki.midibox.org/doku.php?id=midibox_ay_3_8912_board&rev=1305306799

Last update: **2011/05/13 17:13**