MB AY (YM) Boards

AY 3 8912 board

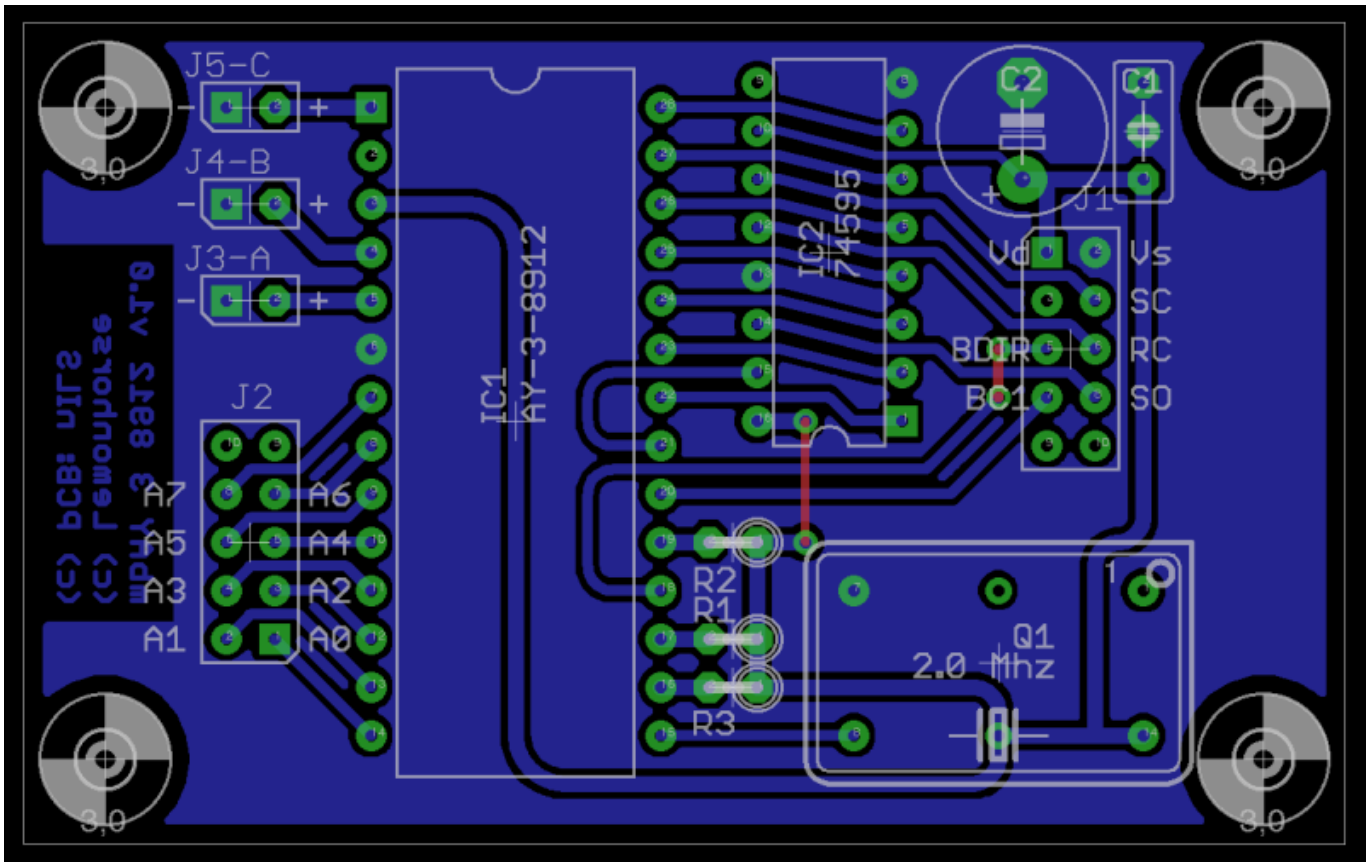

:

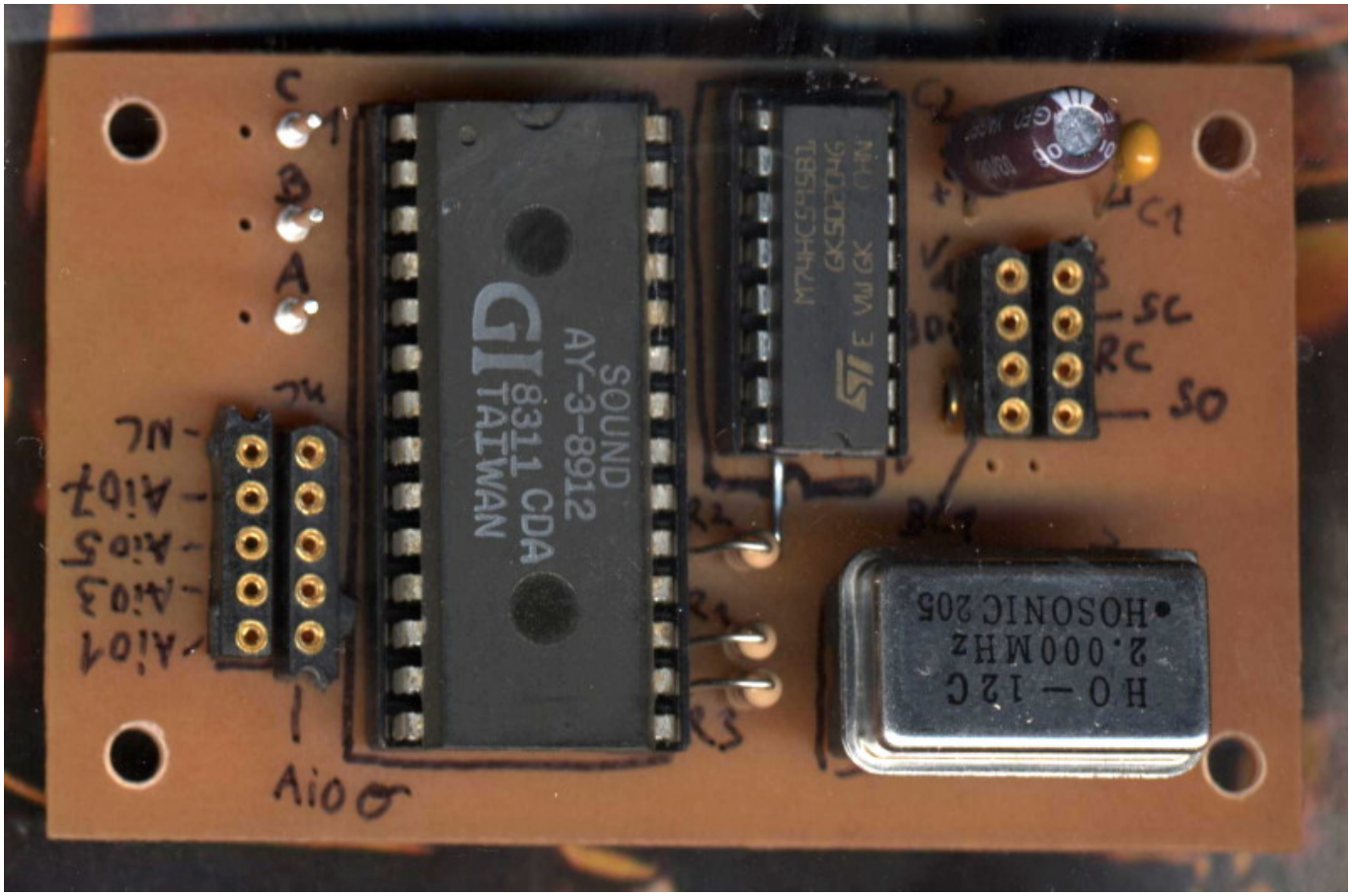
SOUND
AY-3-8912
GI
8311 CDA
TAIWAN
HO-12C
2.000MHz
HOSONIC 205
C1
SC
RC
SO
Aio0

:

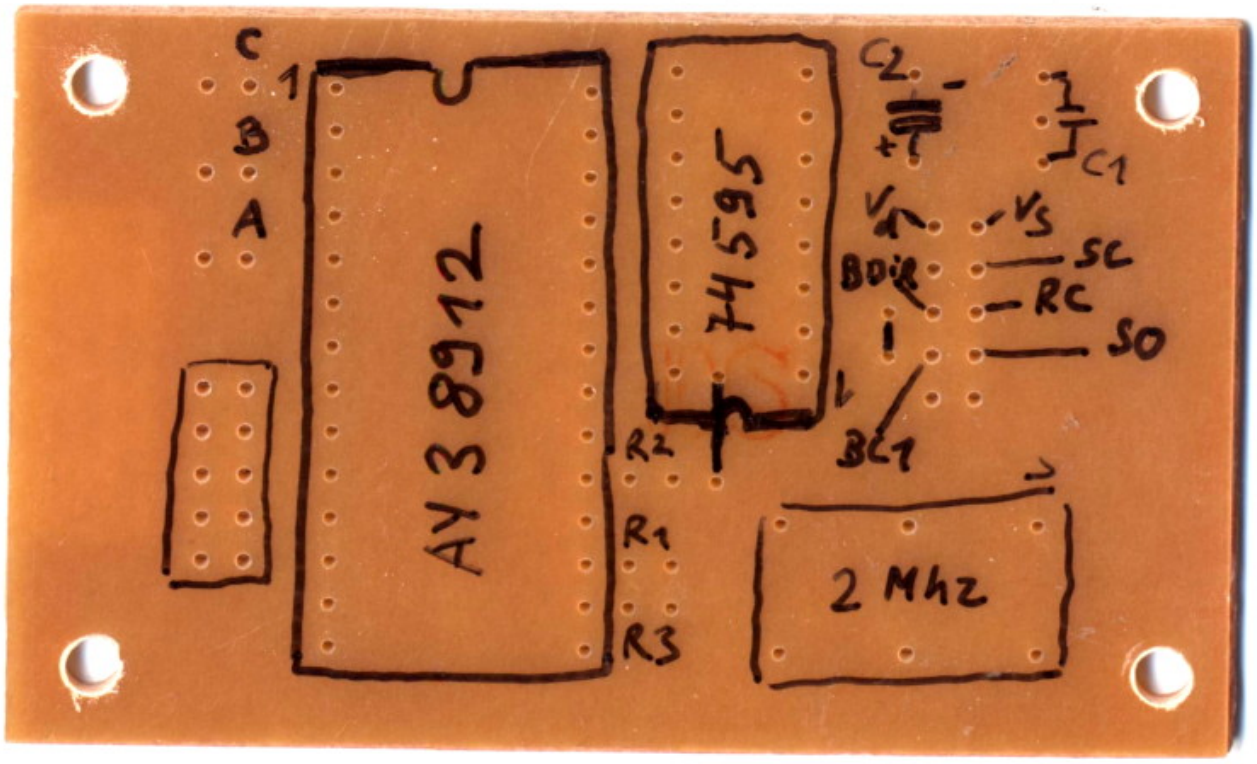
C
1
B
A
AY 3 8912
74595
C2
C1
Vs
SC
RC
SO
BC1
R2
R1
R3
2 Mhz

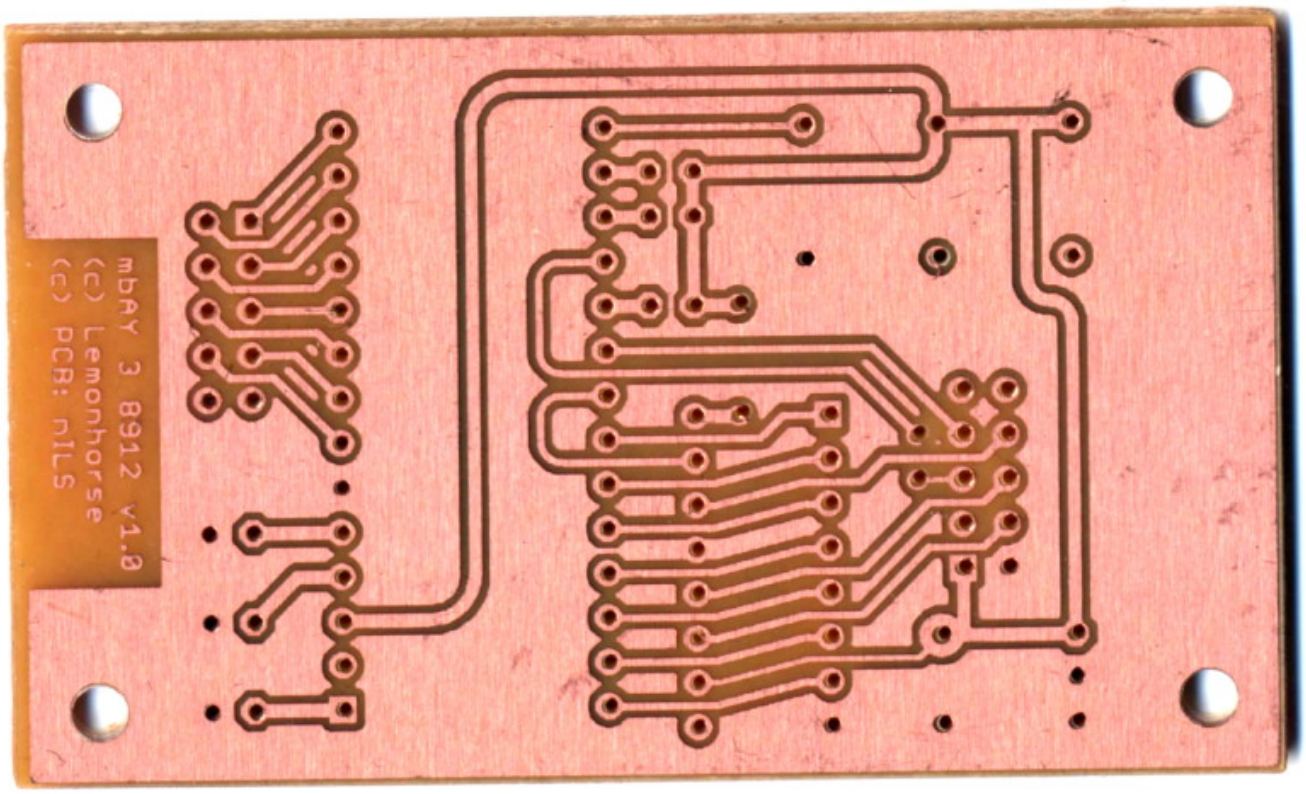

YM2149 Board

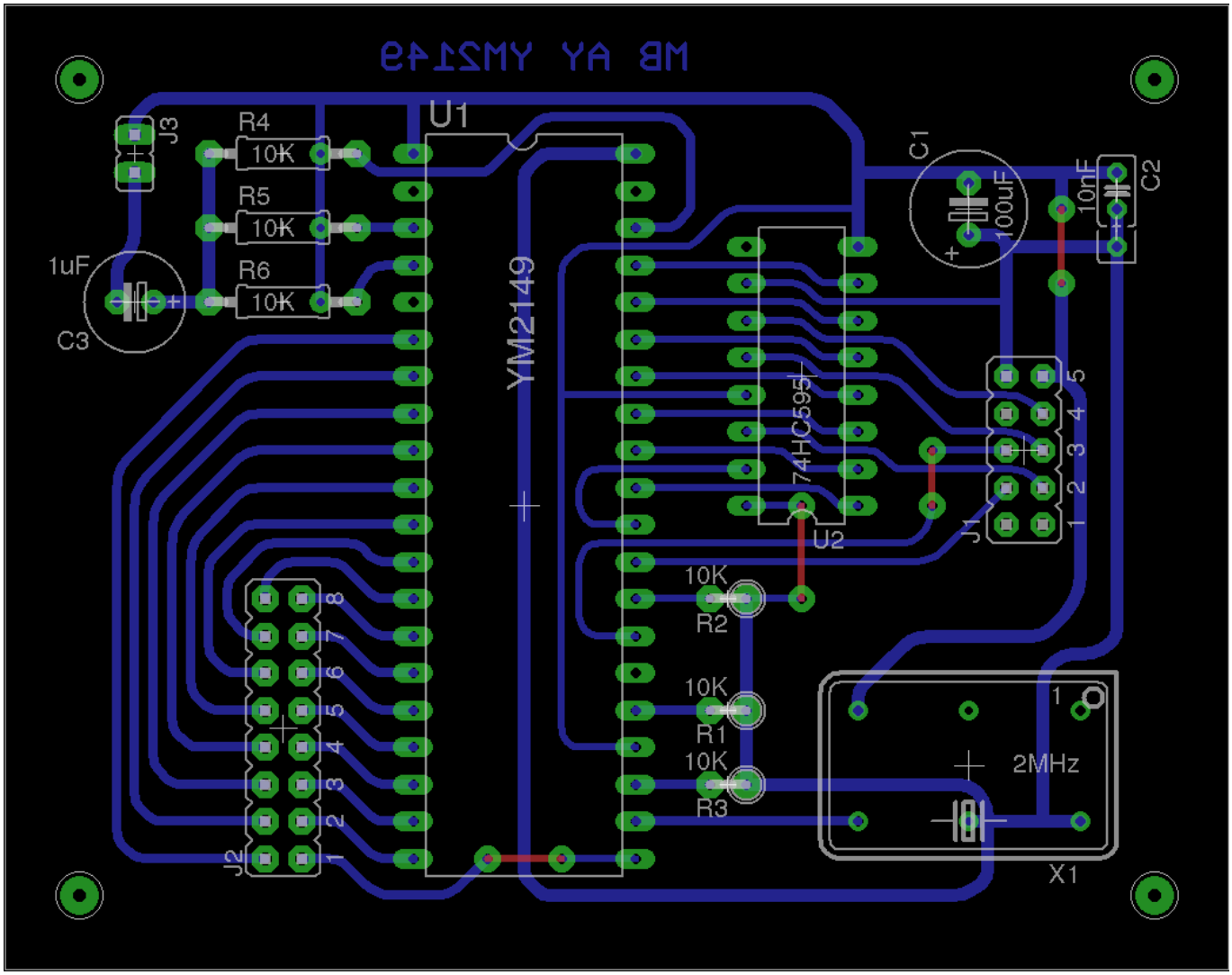
MB AY YM2149
U1
YM2149
J3
R4
10K
R5
10K
R6
10K
1uF
C3
C1
100uF
10nF
C2
74HC595
U2
J1
10K
R2
10K
R1
10K
R3
J2
2MHz
X1

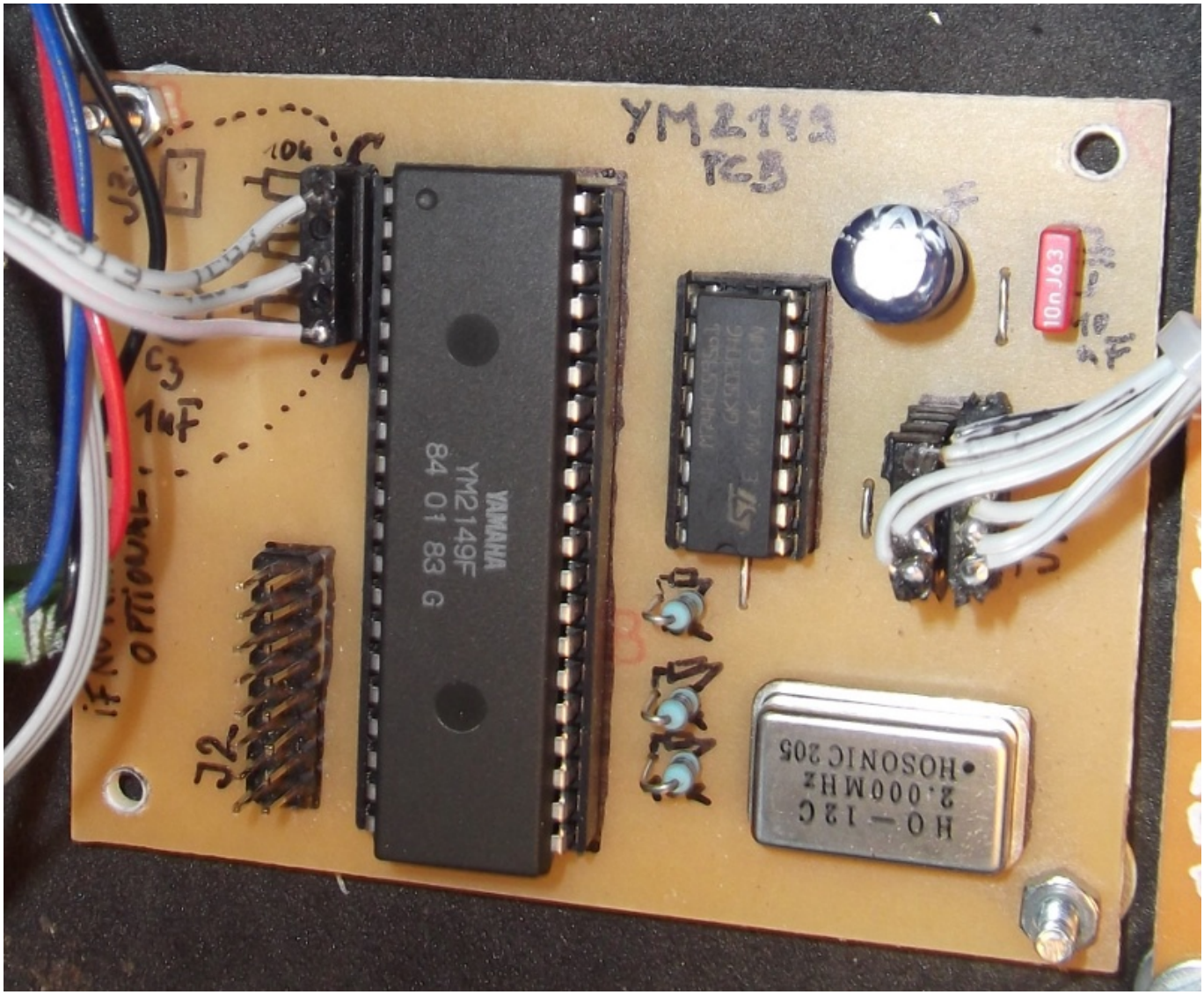

PCB Layout (pdf)

mbAY38912.pdf

::

:

Parts List

mbay38912pcbpartlistv1.txt

::

:

PCB

The AY 3 8912 PCB and the AY 3 8912 OP-Mixer PCB are available at Mikes Onlineshop

http://www.mikes-elektronikseite.de/shop_englisch/index.htm

[26.09.2008]

From:
https://wiki.midibox.org/ - **MIDIbox**

Permanent link:
https://wiki.midibox.org/doku.php?id=midibox_ay_3_8912_board&rev=1305306937

Last update: **2011/05/13 17:15**