MB AY (YM) Boards

AY 3 8912 board

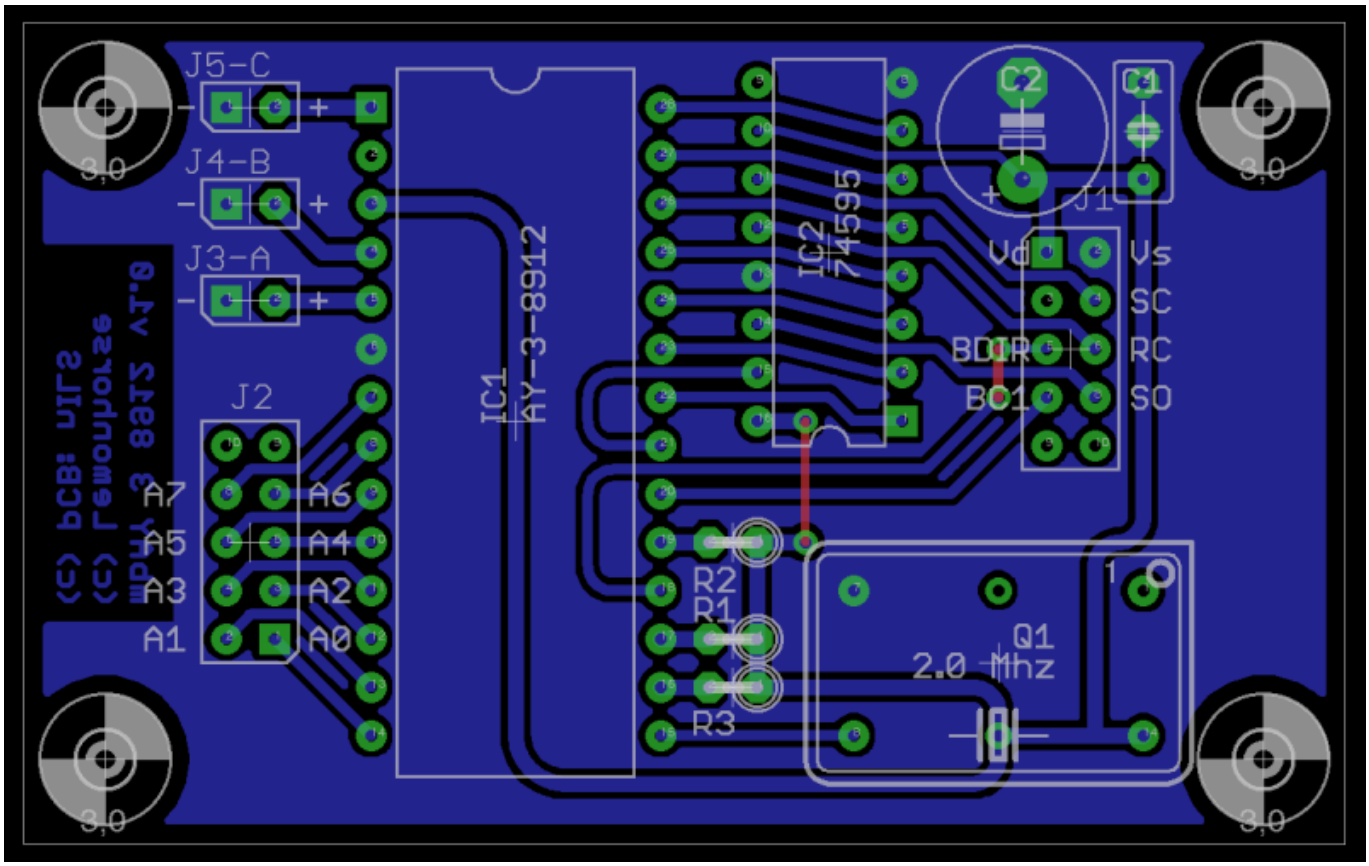

:

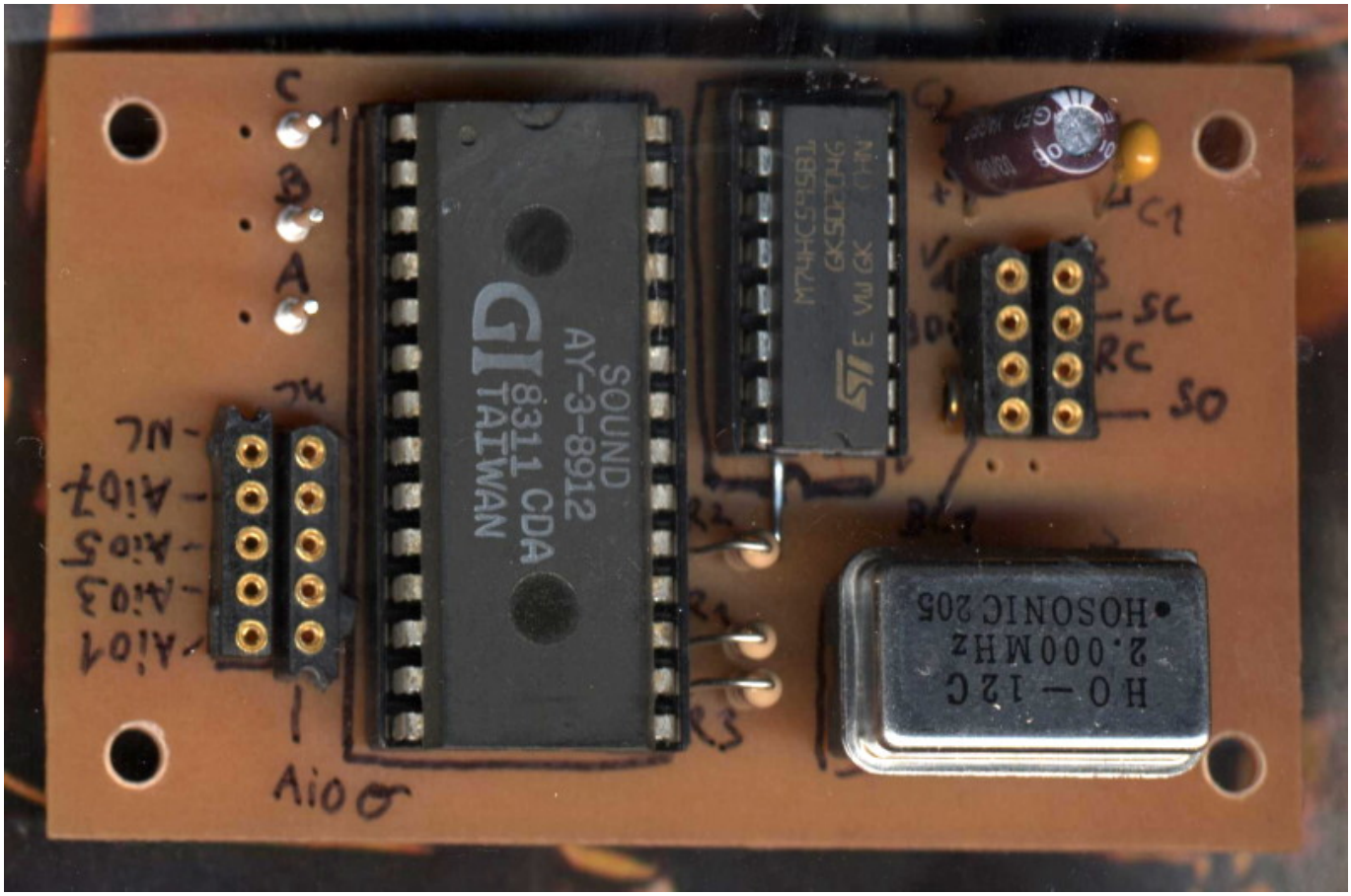
SOUND
AY-3-8912
8311 CDA
TAIWAN
2.000MHz
SC
RC
SO

:

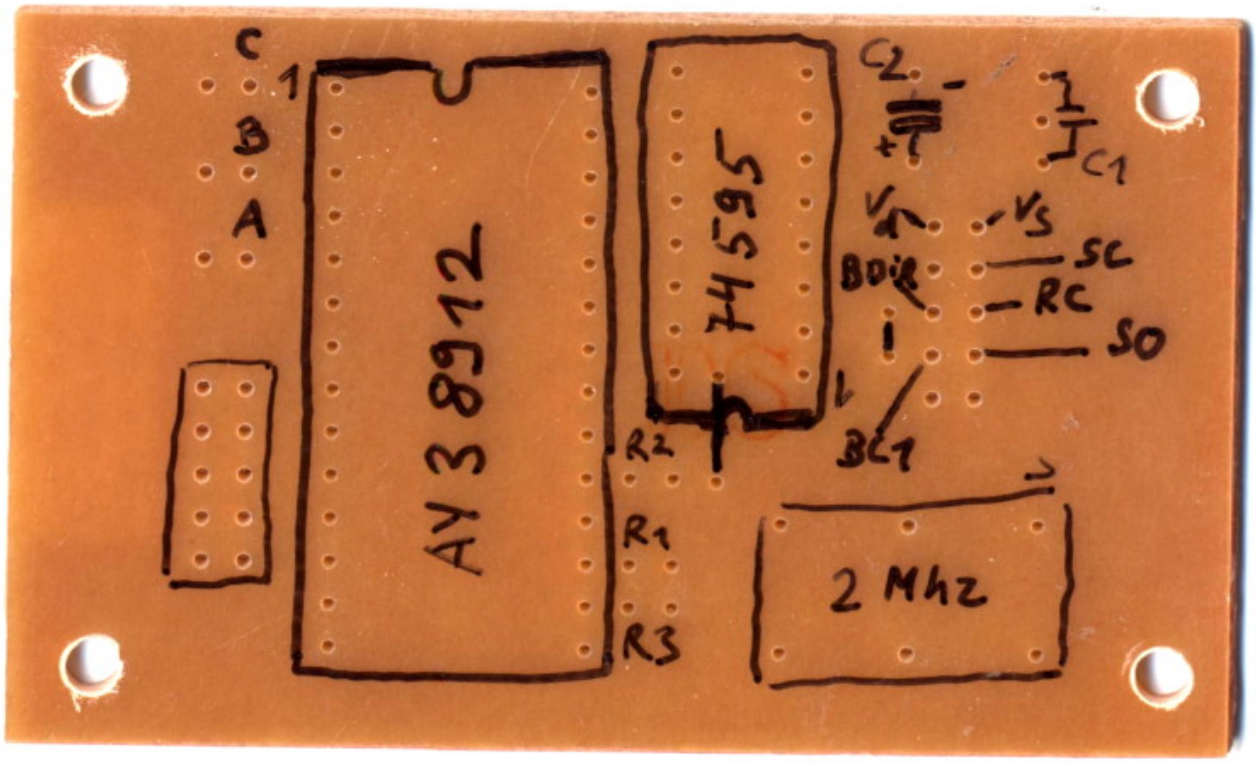
AY 3 8912
74 595
2 Mhz
SC
RC
SO
R1
R2
R3

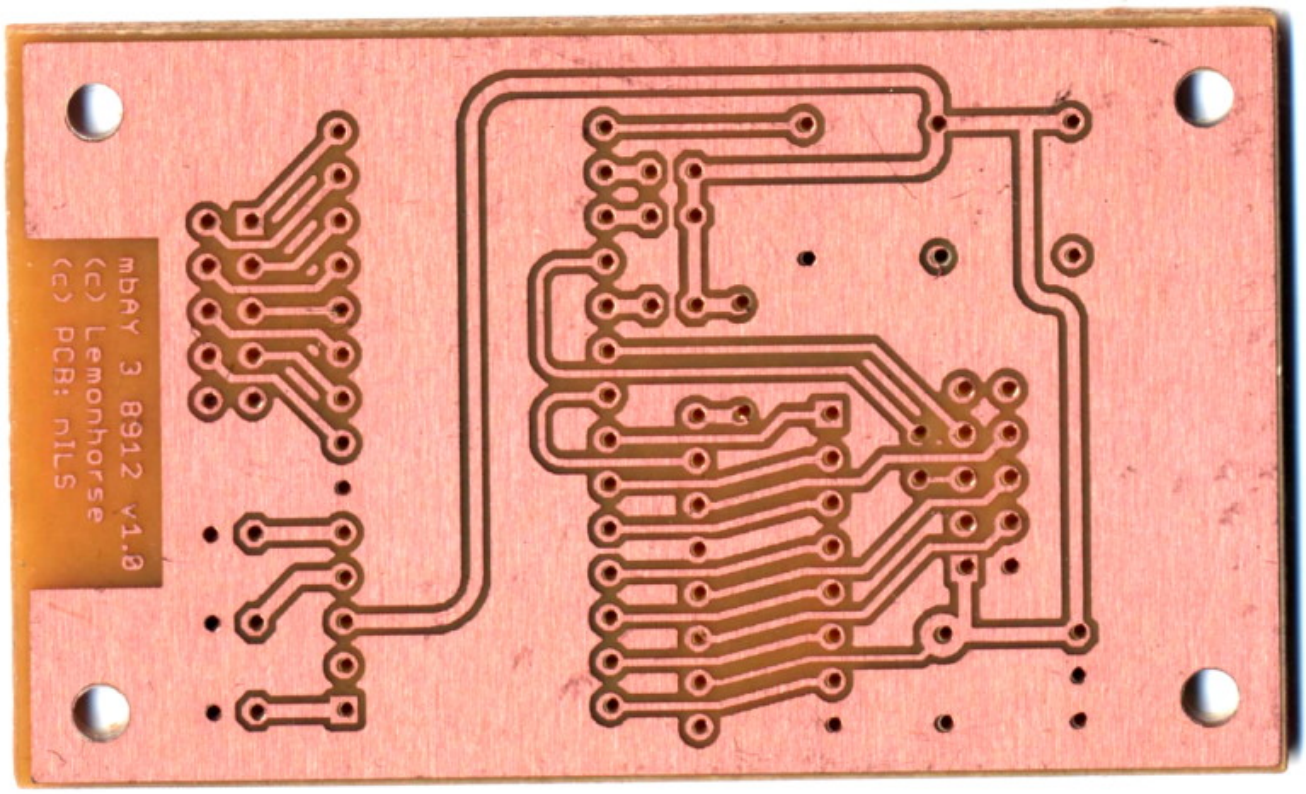

AY 3 8912 board PCB Layout (pdf)

mbAY38912.pdf

YM2149 Board

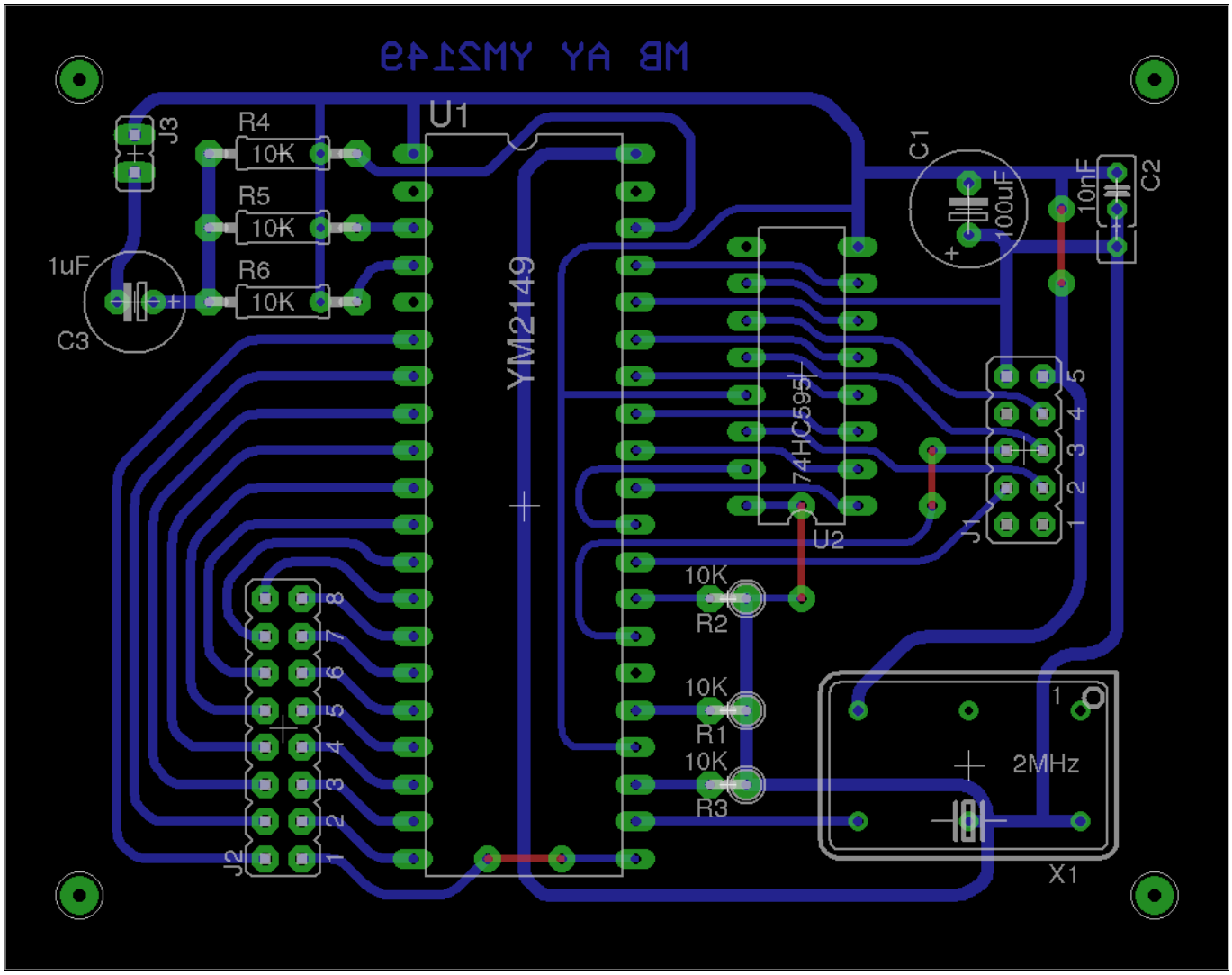
MB AY YM2149
U1
YM2149
J3
R4
10K
R5
10K
R6
10K
1uF
C3
C1
100uF
10nF
C2
74HC595
U2
J1
10K
R2
10K
R1
10K
R3
J2
2MHz
X1

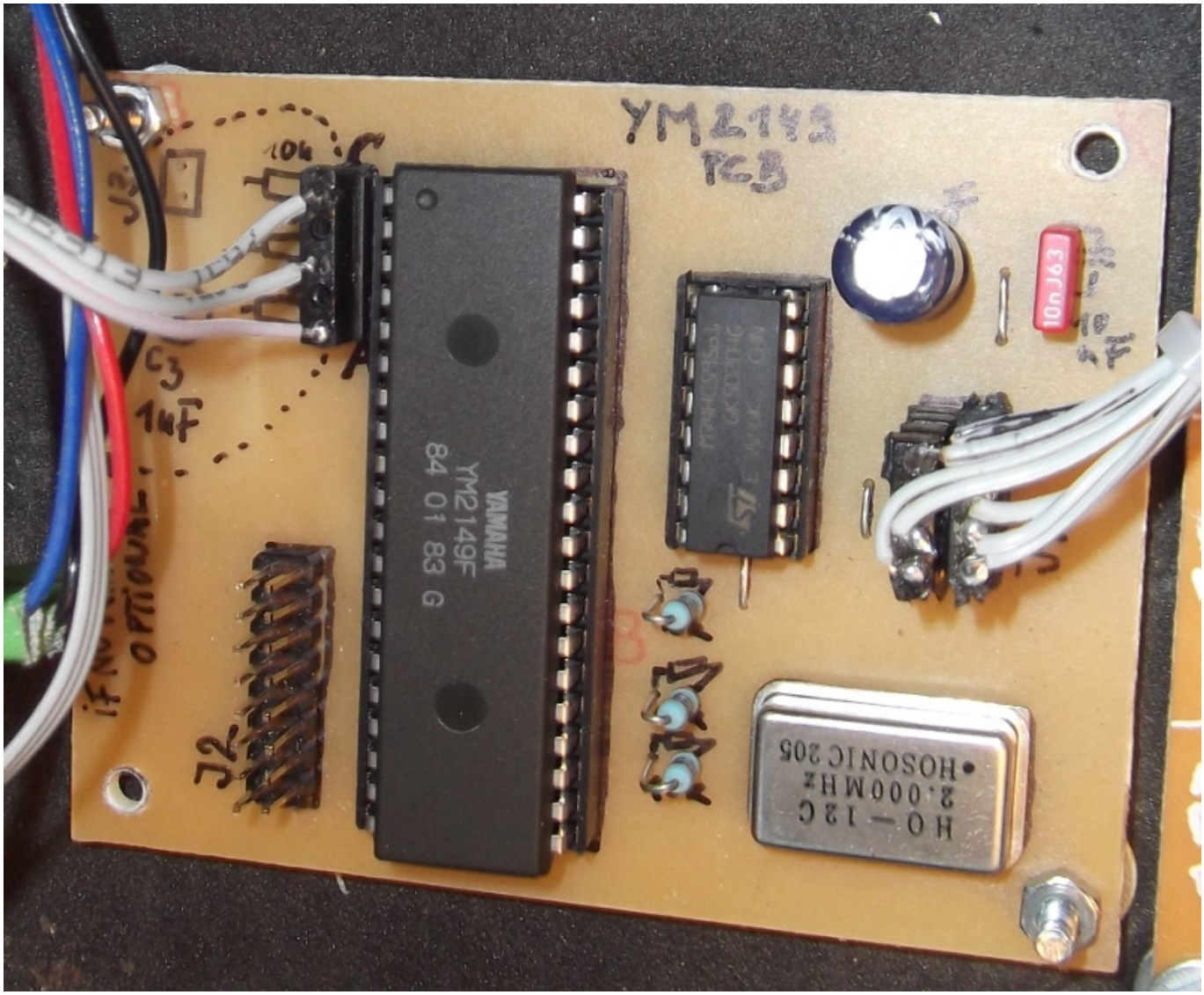

Parts List

mbay38912pcbpartlistv1.txt

::

:

PCB

The AY 3 8912 PCB and the AY 3 8912 OP-Mixer PCB are available at Mikes Onlineshop

http://www.mikes-elektronikseite.de/shop_englisch/index.htm

[26.09.2008]

From:
https://wiki.midibox.org/ - **MIDIbox**

Permanent link:
https://wiki.midibox.org/doku.php?id=midibox_ay_3_8912_board&rev=1305307049

Last update: **2011/05/13 17:17**