MB AY (YM) Boards

AY 3 8912 board

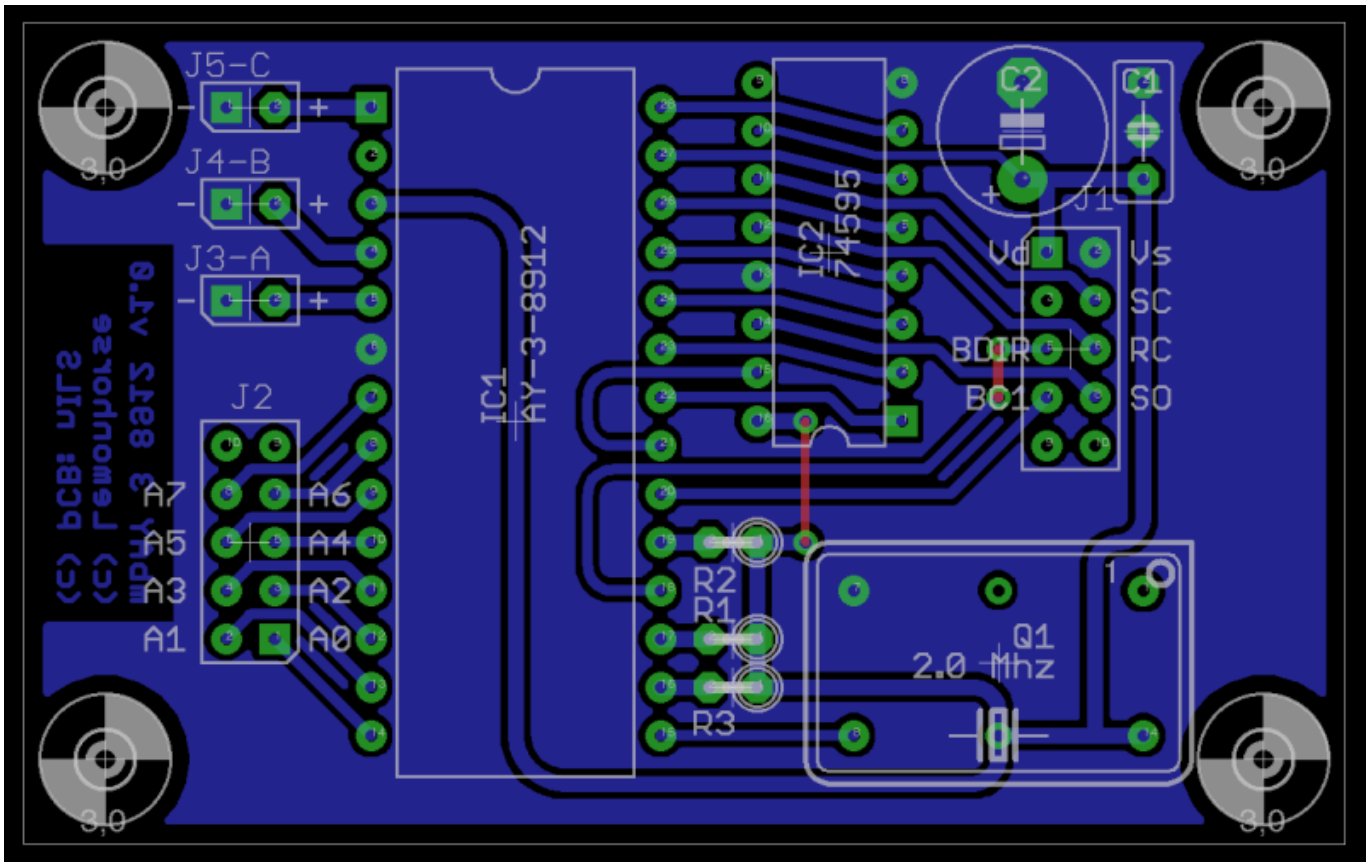

:

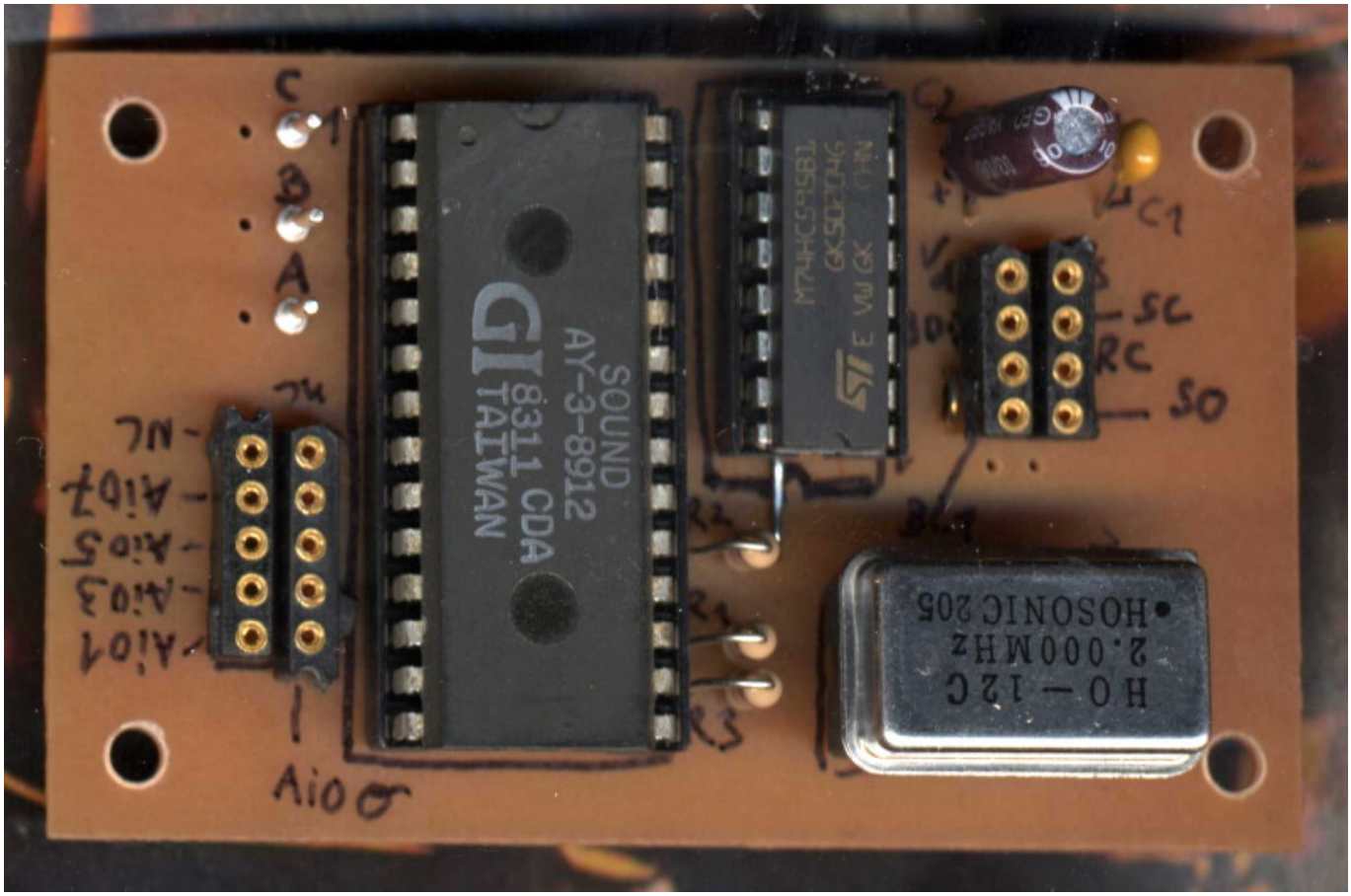
SOUND
AY-3-8912
GI
8311 CDA
TAIWAN
HO-12C
2.000MHz
HOSONIC 205
C
B
A
C1
SC
RC
SO
R2
R1
R3
Aio0

:

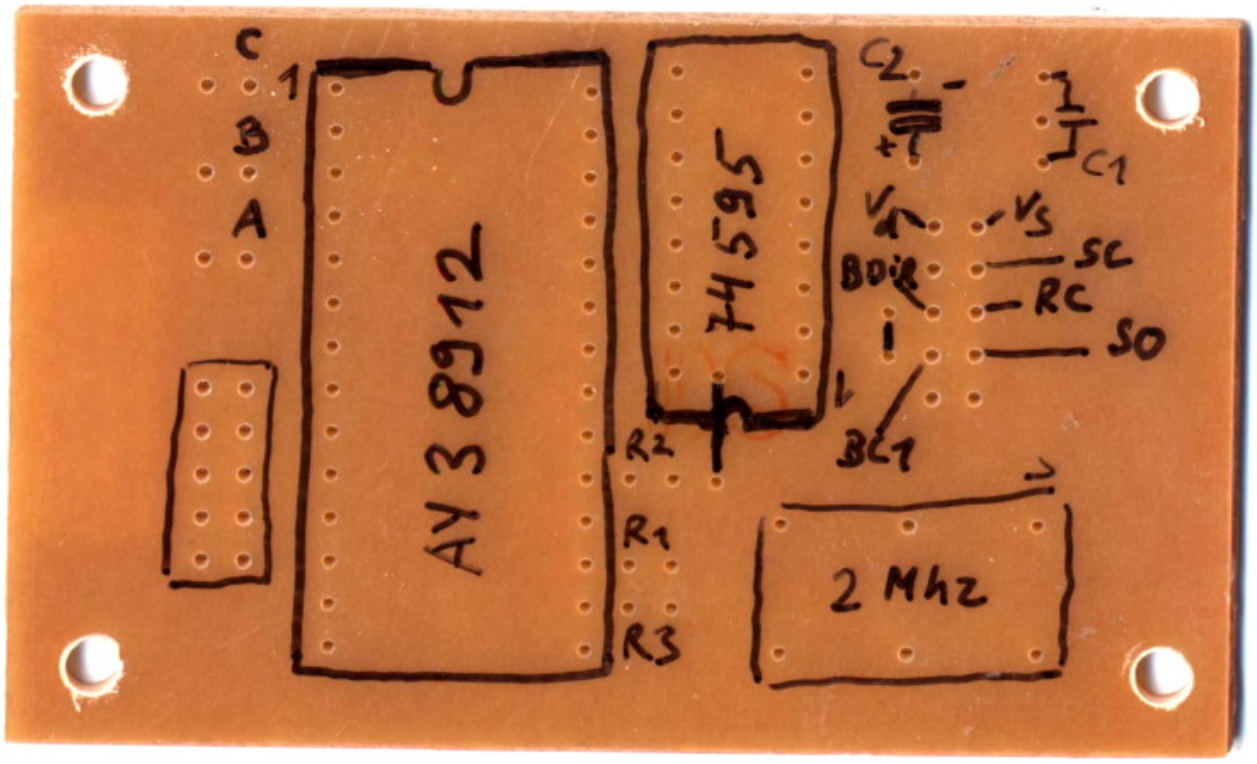
C
B
A
AY 3 8912
74595
C2
C1
Vs
SC
RC
SO
BC1
R2
R1
R3
2 Mhz

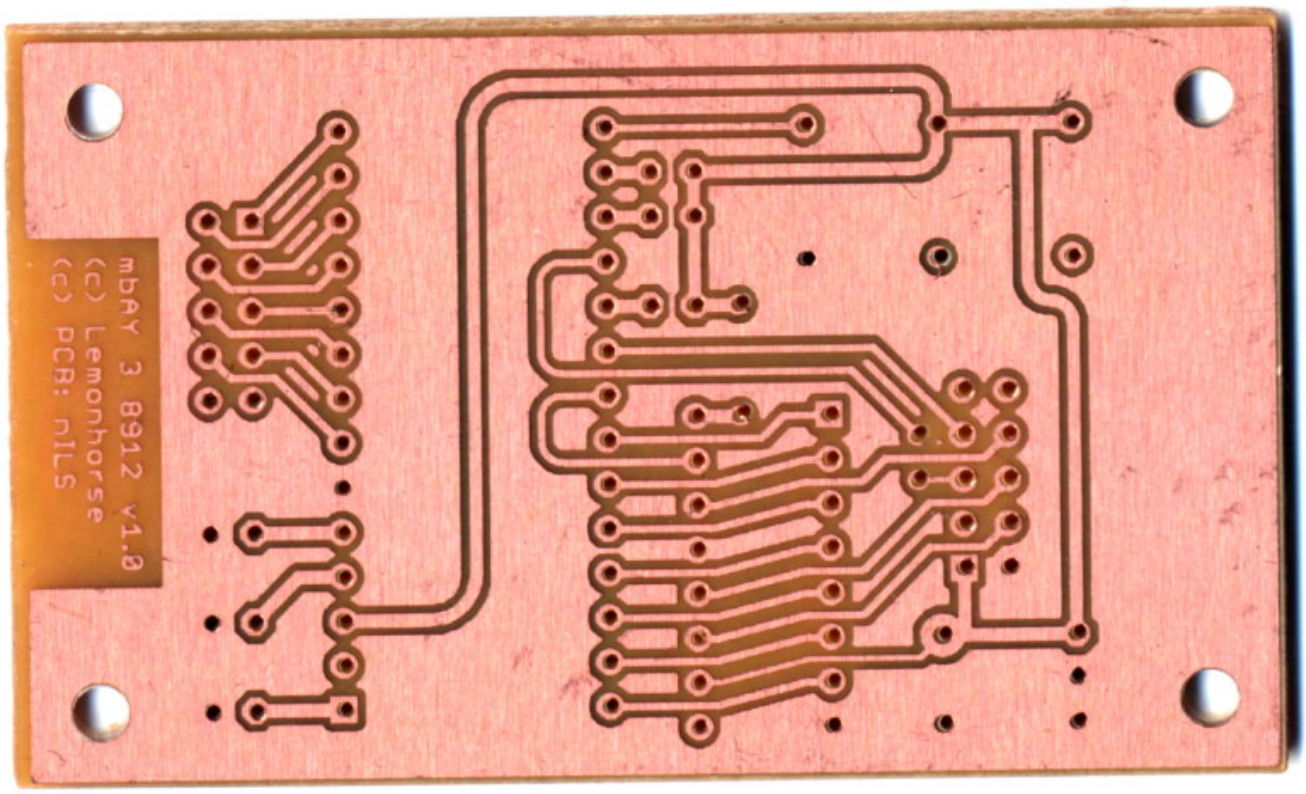

AY 3 8912 board PCB Layout (pdf)

mbAY38912.pdf

mbay38912pcbpartlistv1.txt

:::

::

:

YM2149 Board

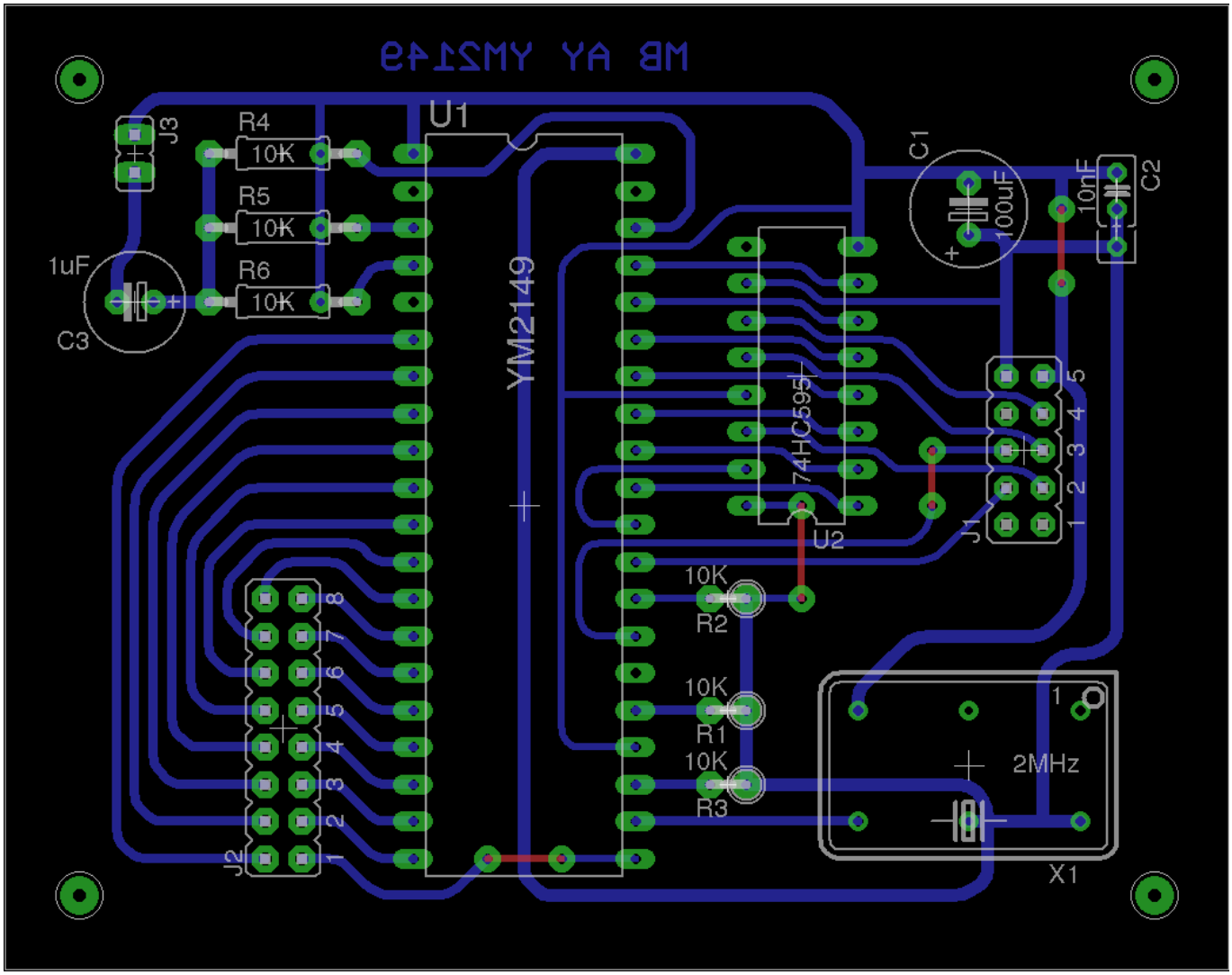
MB AY YM2149
U1
YM2149
J3
R4
10K
R5
10K
R6
10K
1uF
C3
C1
100uF
10nF
C2
74HC595
U2
J1
1
2
3
4
5
10K
R2
10K
R1
10K
R3
J2
1
2
3
4
5
6
7
8
2MHz
X1

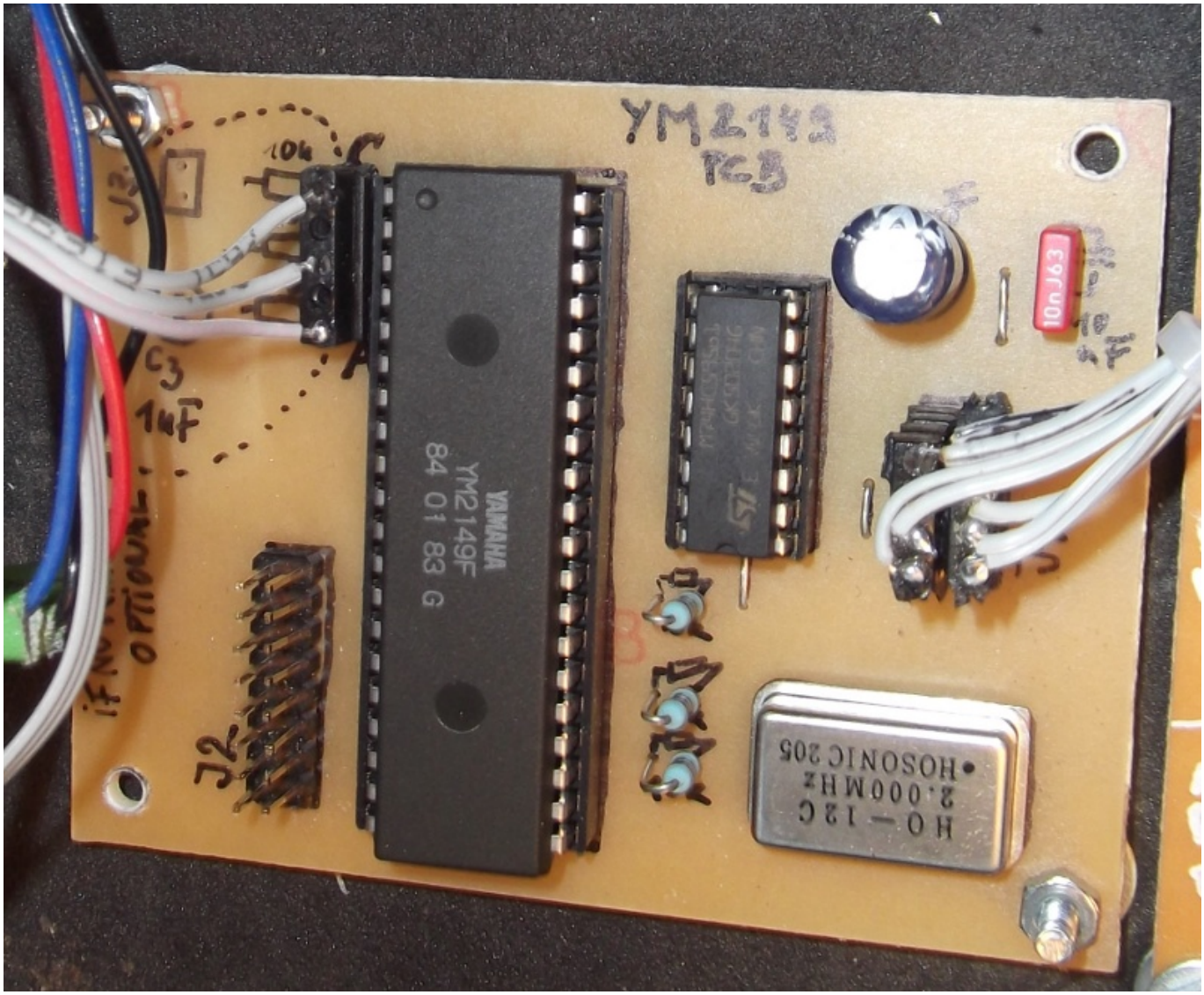

PartlistYM2149PCB.txt

::

:

CORE8 <-> AY (YM) (pdf)

- AY 3 8912 & YM2149 PCB INTERCONNECTION (pdf) ==⇒ mbayv2con.pdf

Obtain PCB's

The AY 3 8912, YM 2149 and the Mixer PCB are available at Mikes Onlineshop

http://www.mikes-elektronikseite.de/shop_englisch/index.htm

[05/2011]

From:
https://wiki.midibox.org/ - **MIDIbox**

Permanent link:
https://wiki.midibox.org/doku.php?id=midibox_ay_3_8912_board&rev=1305312519

Last update: **2011/05/13 18:48**