MB AY (YM) Boards

Obtain PCB's

The AY 3 8912, YM 2149 and the Mixer PCB are available at Mikes Onlineshop

http://www.mikes-elektronikseite.de/shop_englisch/index.htm

CORE8 <-> AY (YM) (pdf)

- AY 3 8912 & YM2149 PCB Interconnections

AY 3 8912 board

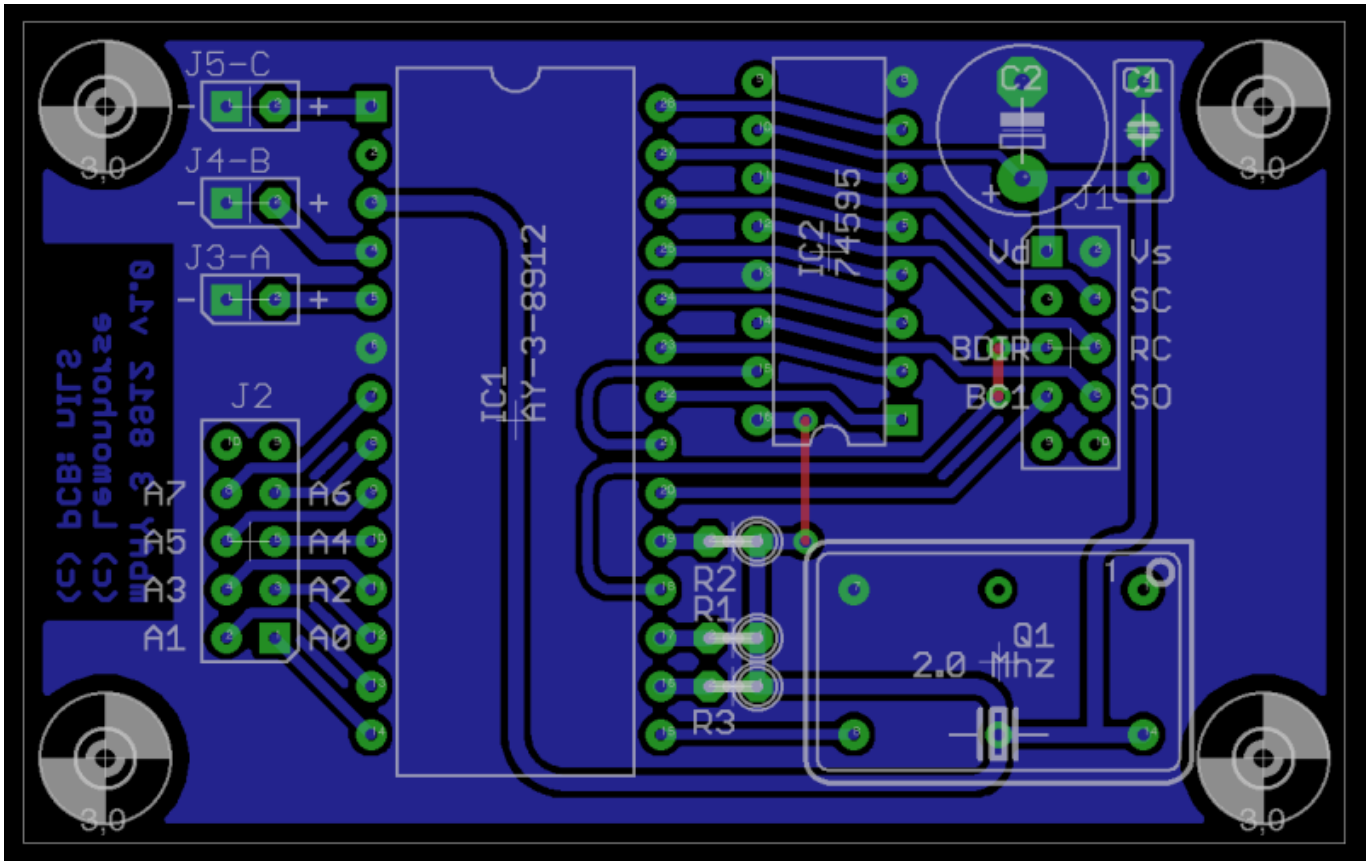

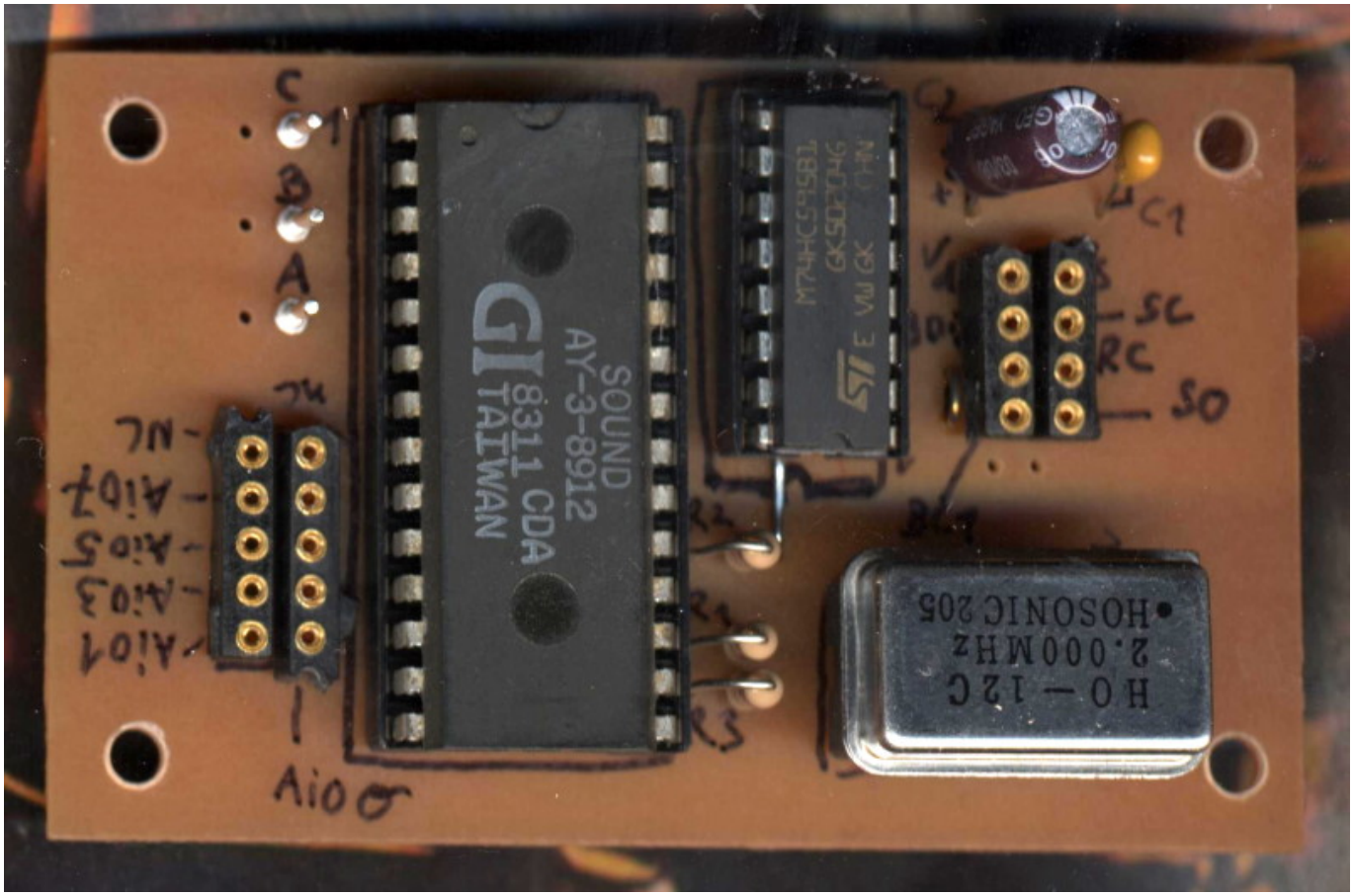
SOUND
AY-3-8912
GI
8311 CDA
TAIWAN
HO-12C
2.000MHz
HOSONIC 205
C
B
A
C1
SC
RC
SO
R2
R1
R3
Aio0

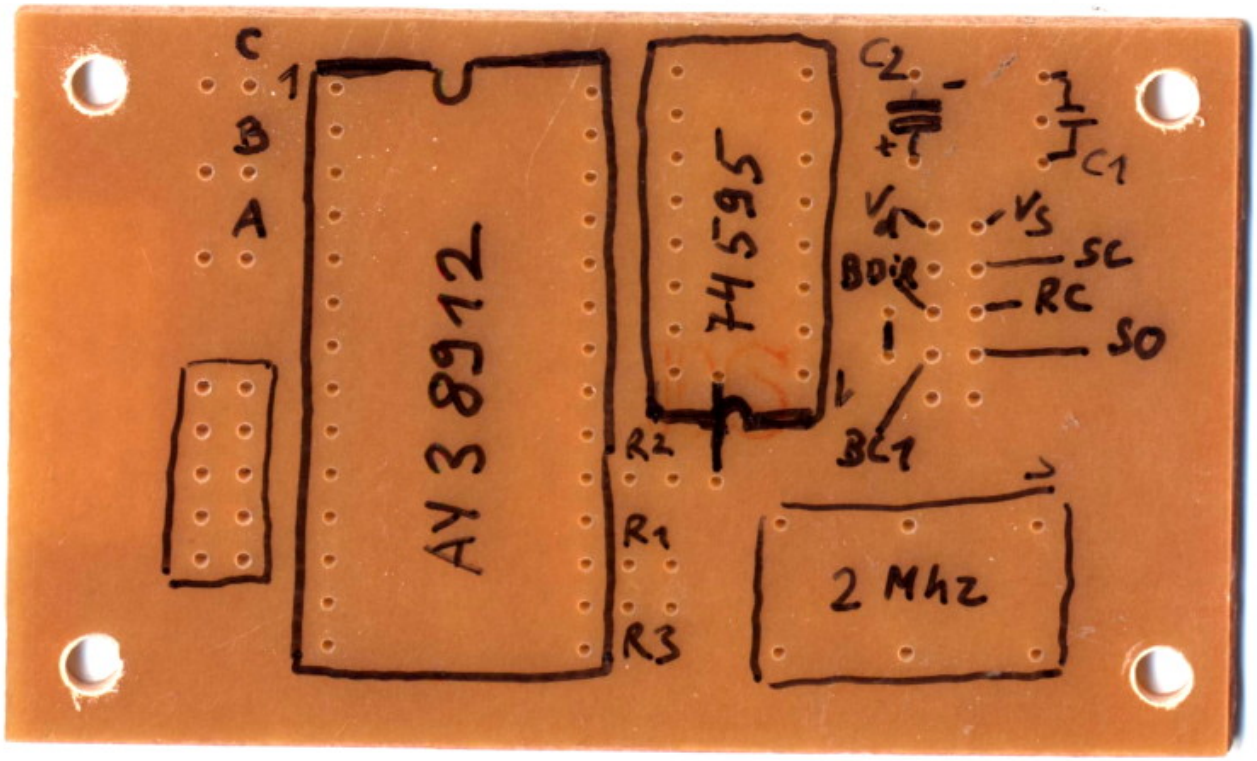
C
B
A
AY 3 8912
74595
C2
C1
Vd
Vs
SC
RC
SO
BDIR
BC1
R2
R1
R3
2 Mhz

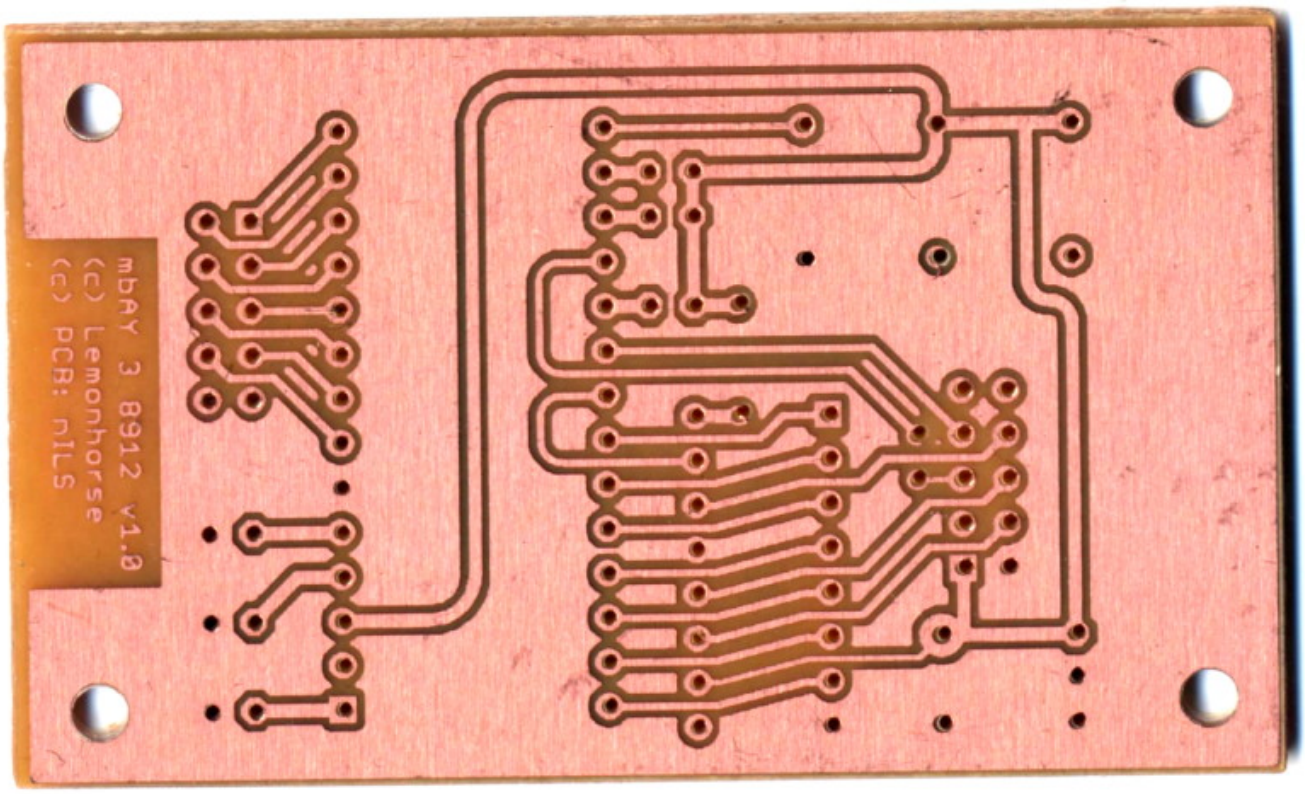

AY 3 8912 board PCB Layout+Parts List:

- mbAY38912.pdf
- mbay38912pcbpartlistv1.txt

YM2149 Board

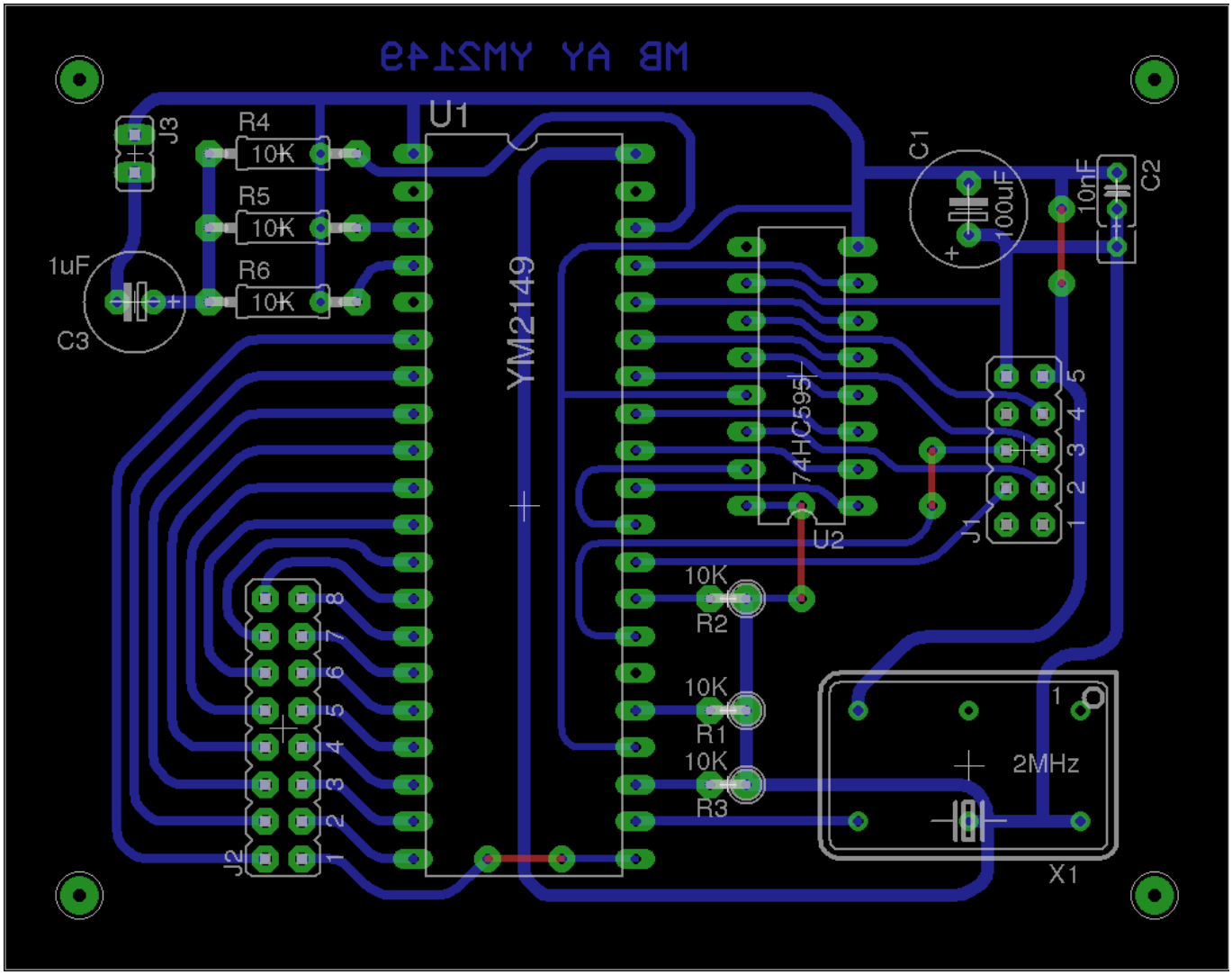
MB AY YM2149
U1
YM2149
J3
R4
10K
R5
10K
R6
10K
1uF
C3
C1
100uF
10nF
C2
74HC595
U2
J1
10K
R2
10K
R1
10K
R3
2MHz
X1
J2

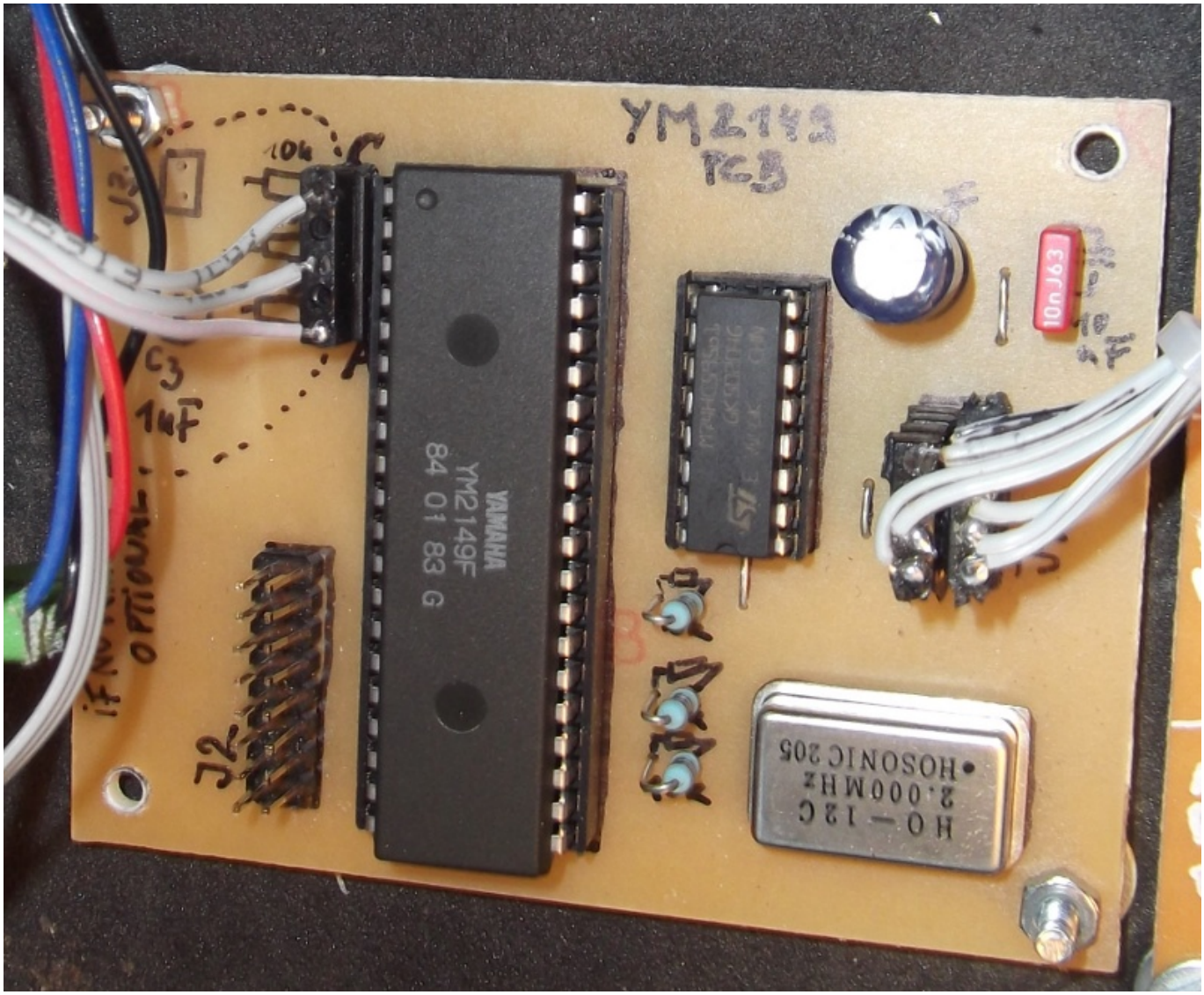

YM2149 Board Parts list:

- PartlistYM2149PCB.txt

From:
https://wiki.midibox.org/ - **MIDIbox**

Permanent link:
https://wiki.midibox.org/doku.php?id=midibox_ay_3_8912_board&rev=1465910665

Last update: **2016/06/14 13:24**