MIDIBox AY 3 8912 - C64 Keyboard

The Commodore 64 Keyboard



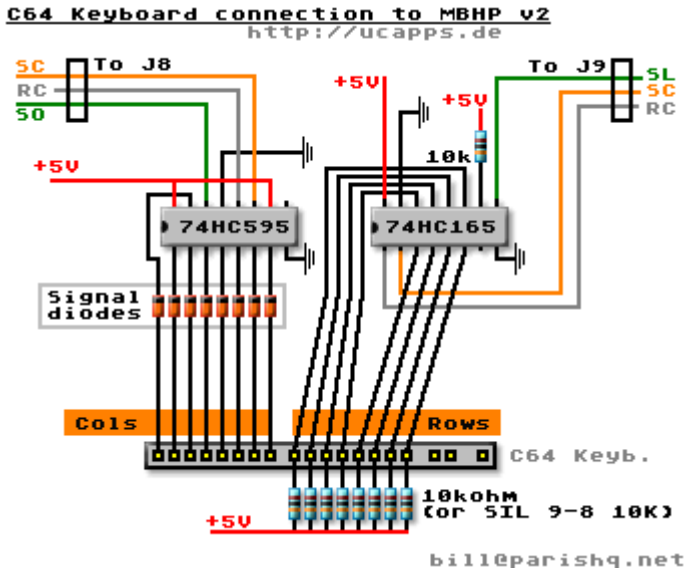

::.

From:
https://wiki.midibox.org/ - **MIDIbox**

Permanent link:
https://wiki.midibox.org/doku.php?id=midibox_ay_keyboard&rev=1269860971

Last update: **2010/03/29 11:09**