MIDIBox AY 3 8912 - C64 Keyboard

The MIDIBox AY has no Encoders or Buttons - but a C64 Keyboard.

The Commodore 64 Keyboard



⇒ http://en.wikipedia.org/wiki/Commodore_64

Commodore64 Keyboard MBHP Interconnection

The C64 Keyboard must be connected to the **MBHP DOUT** (DOUT1: J3(Pin D0 to D7)) Board and **MBHP DIN** (DIN1: J3/J4(Pin D0 to D7)) Board

See DOUTX4 ⇒ http://ucapps.de/mbhp/mbhp_doutx4.pdf

See DINX4 ⇒ http://ucapps.de/mbhp/mbhp_dinx4.pdf

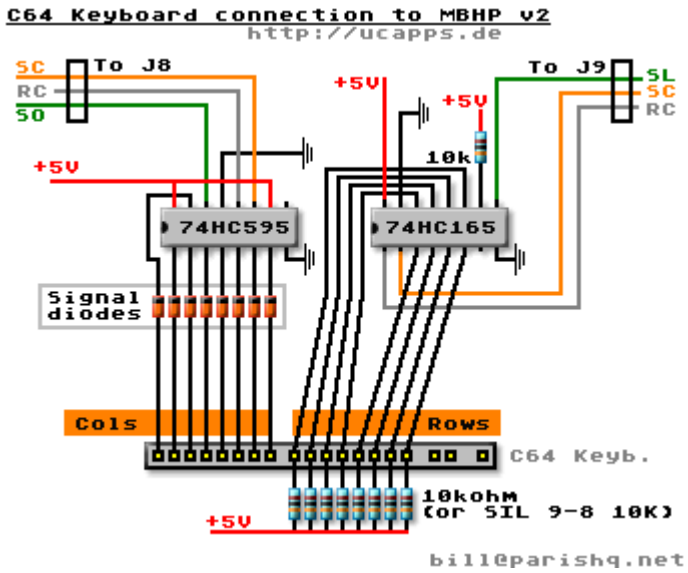

::.

See also **MidiBoxKB by bill** ⇒ midiboxkb_-_using_a_c64_keyboard_as_input

From:
https://wiki.midibox.org/ - **MIDIbox**

Permanent link:
https://wiki.midibox.org/doku.php?id=midibox_ay_keyboard&rev=1269867850

Last update: **2010/03/29 13:04**