OLED Displays



Introduction

- Wikipedia OLED Technology

OLED Displays devices provides **better luminosity** than a classical backlighted LCD. You can plug it as a LCD to your core module. It can be CLCD or GLCD.

Supported Tested References

- SSD1306 based
- SSD1322 based

OLED Forum Thread

Connections

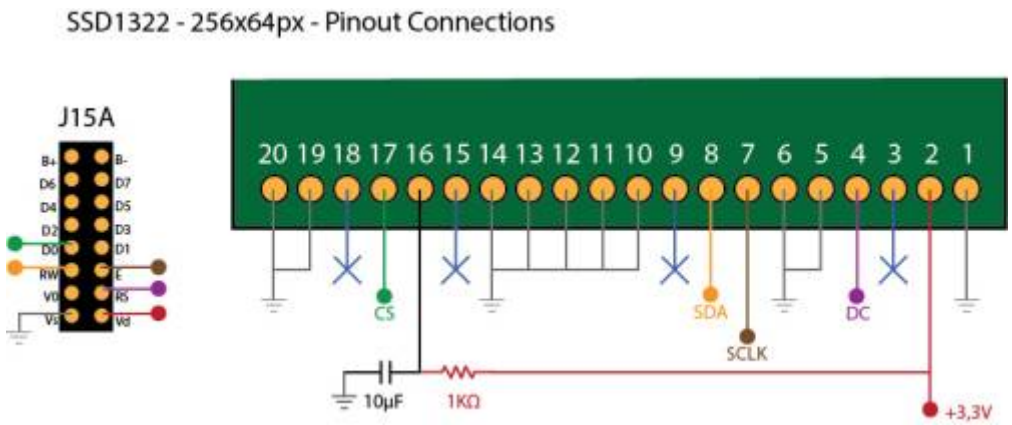

- Single SSD1306

- Multiple SSD1306

Tech demo Video

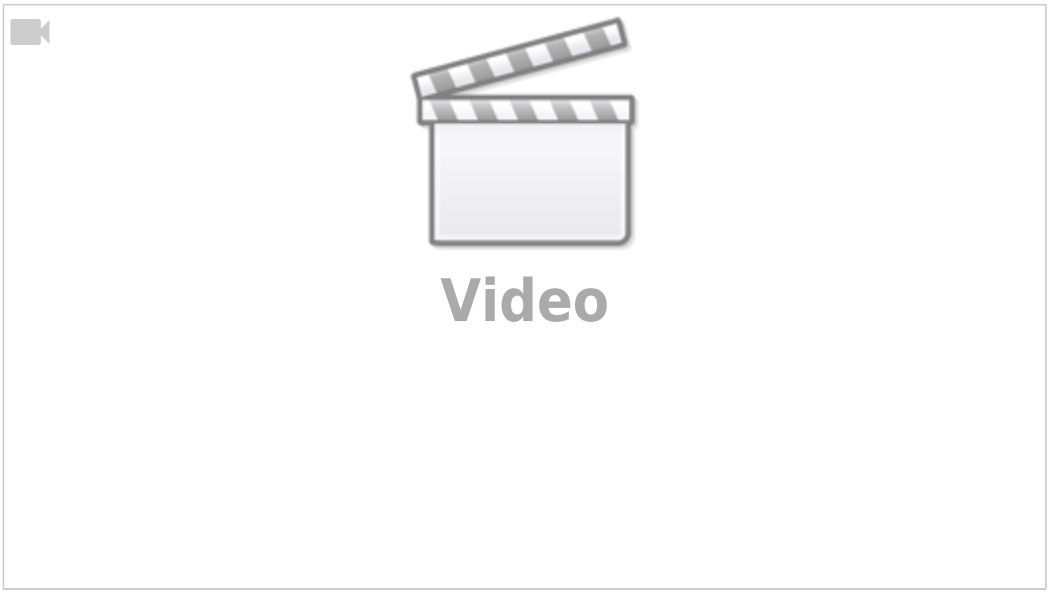

From:
https://wiki.midibox.org/ - **MIDIbox**

Permanent link:
https://wiki.midibox.org/doku.php?id=oled&rev=1467851793

Last update: **2016/07/07 00:36**