# OLED Displays



## Introduction

- Wikipedia OLED Technology

OLED Displays devices provides **better luminosity** than a classical backlighted LCD. You can plug it as a LCD to your core module. It can be CLCD or GLCD.

***Supported Graphical-based Tested References***

- SSD1306 based
- SSD1322 based

***Supported Text-based Tested References***

Fix Me! *: Add supported text-based OLED references*

OLED Forum Thread

## Connections

### SSD1306

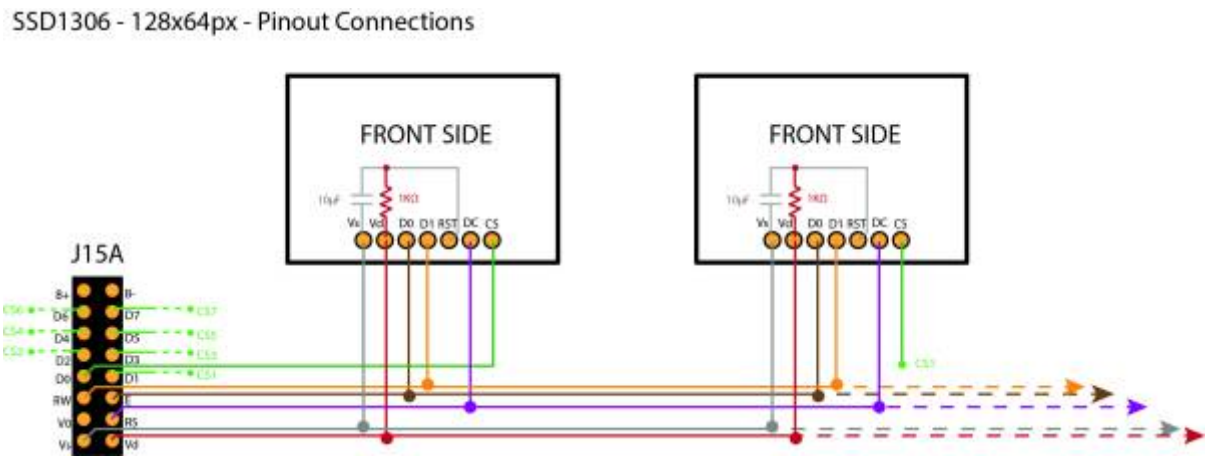


### SSD1322

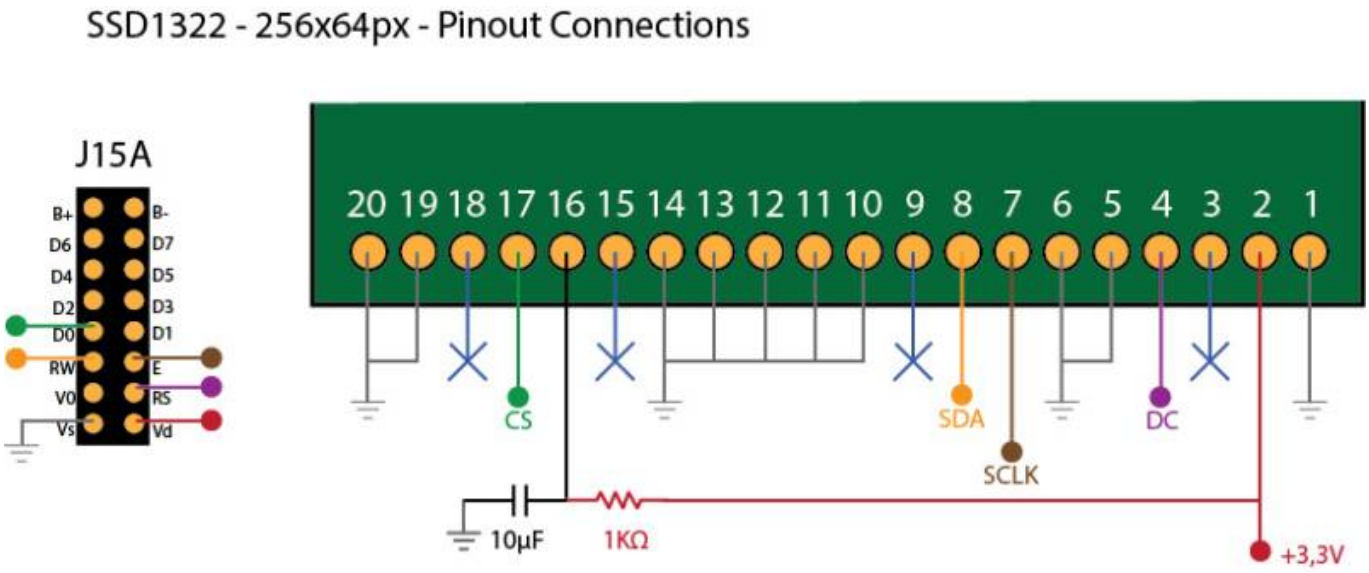


## Tech demo Videos









From:
https://wiki.midibox.org/ - **MIDIbox**

Permanent link:
**https://wiki.midibox.org/doku.php?id=oled&rev=1467973254**

Last update: **2016/07/08 10:20**