OLED Displays



Introduction

- Wikipedia OLED Technology

OLED Displays devices provides **better luminosity** than a classical backlighted LCD. You can plug it as a LCD to your core module. It can be CLCD or GLCD.

Supported Graphical-based Tested References

- SSD1306 based
- SSD1322 based

Supported Text-based Tested References

Fix Me! *: Add supported text-based OLED references*

OLED Forum Thread

Connections

SSD1306

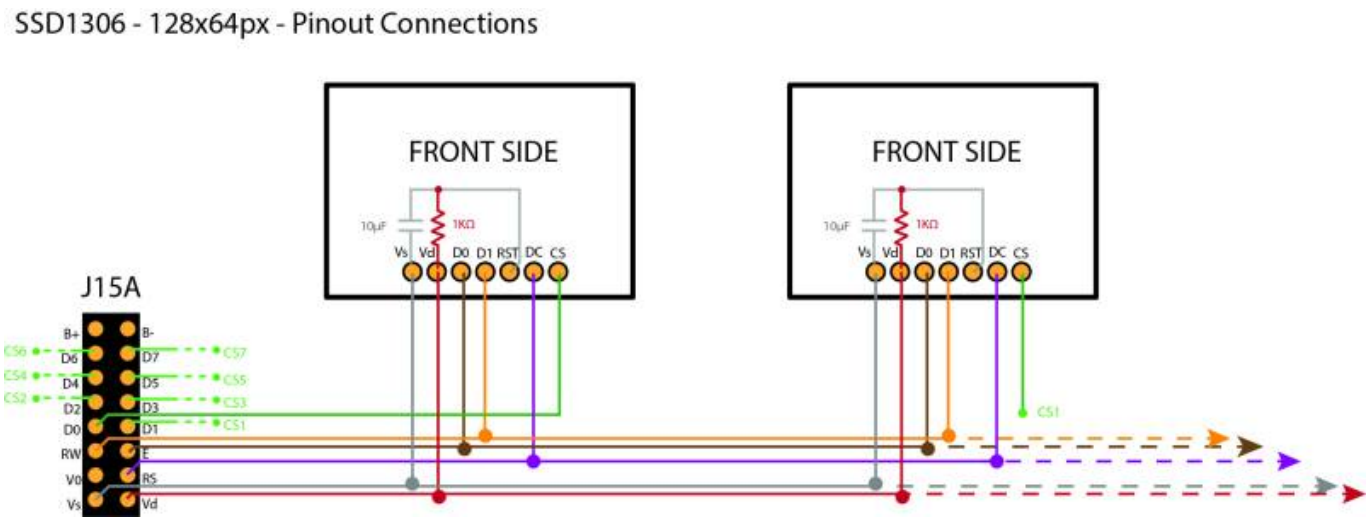

SSD1322

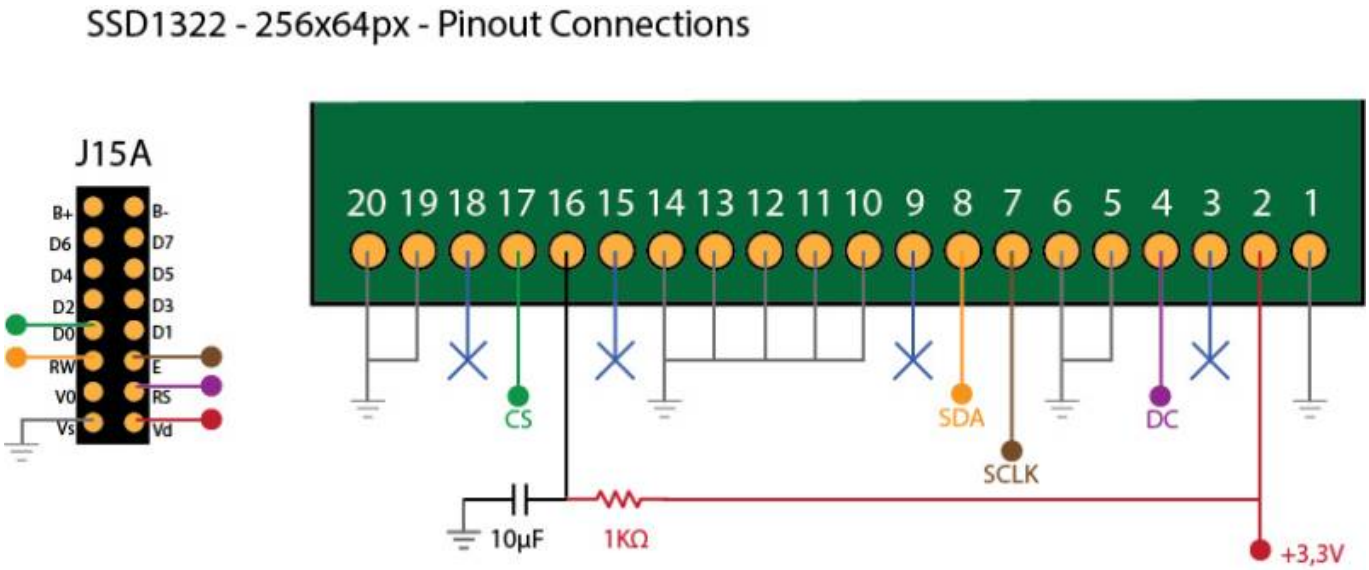

Tech demo Videos







From:
https://wiki.midibox.org/ - **MIDIbox**

Permanent link:
https://wiki.midibox.org/doku.php?id=oled&rev=1467989881

Last update: **2016/07/08 14:58**