OpenPAD

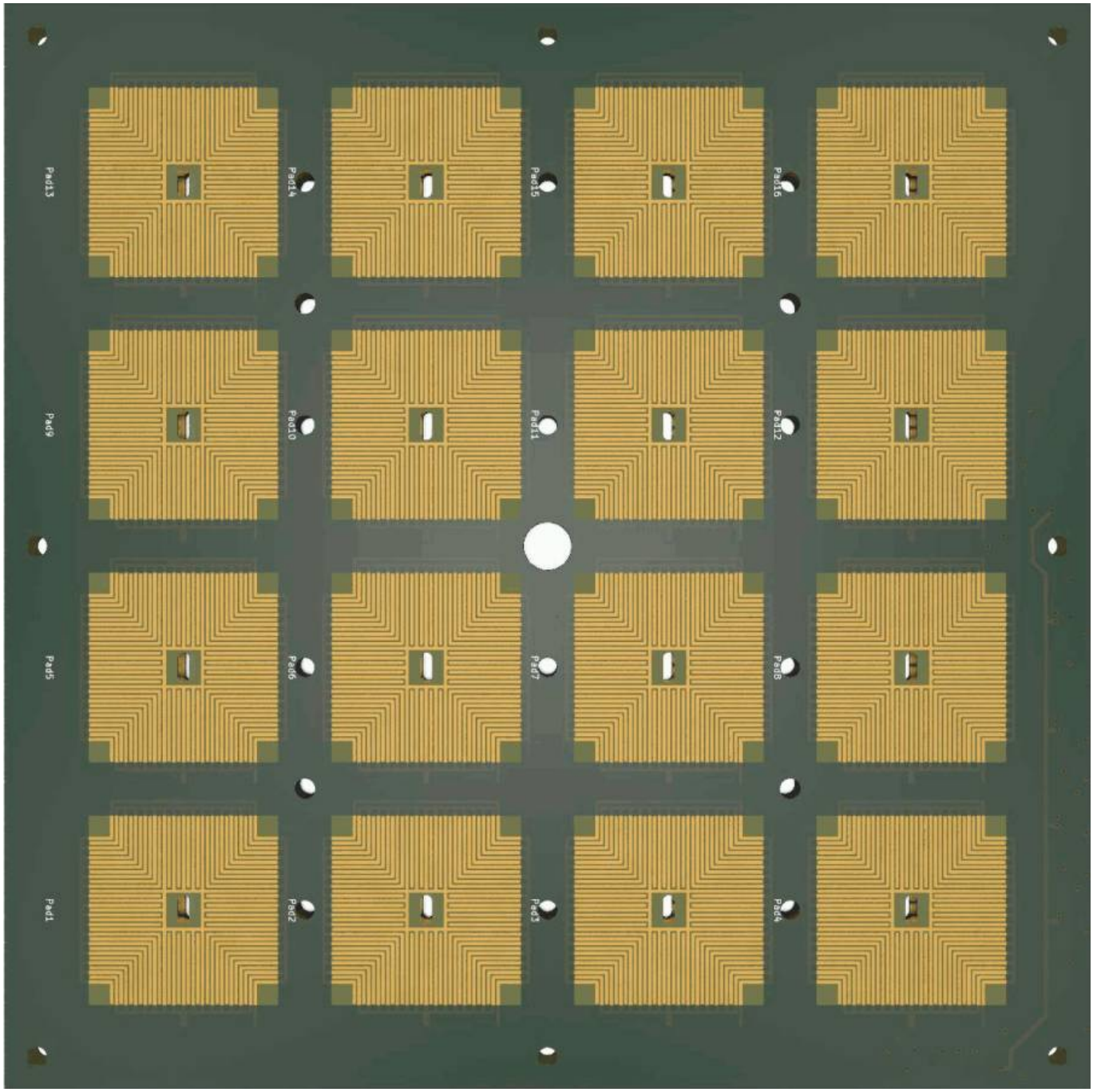
Pad13
Pad14
Pad15
Pad16
Pad9
Pad10
Pad11
Pad12
Pad5
Pad6
Pad7
Pad8
Pad1
Pad2
Pad3
Pad4

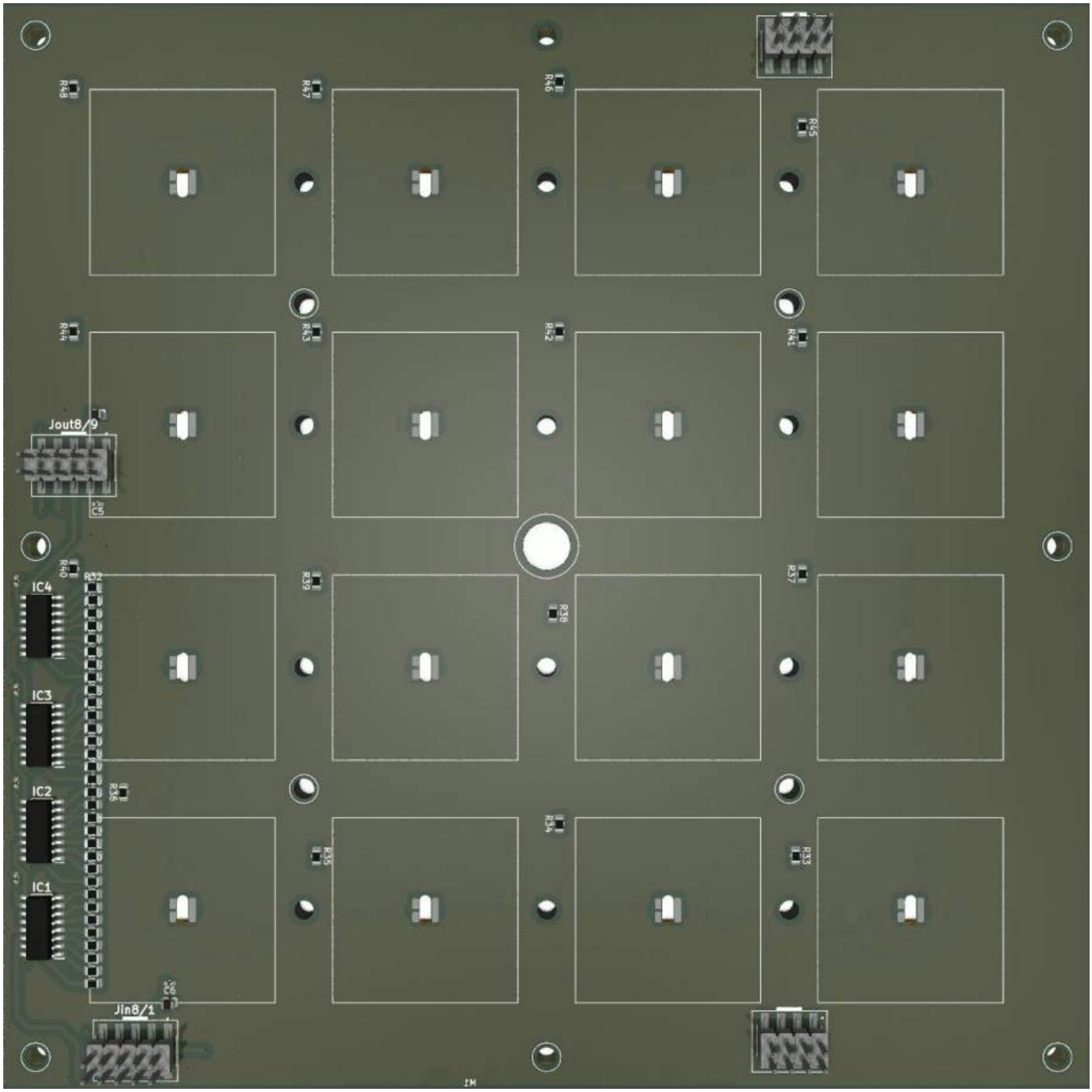
Jout8/9
Jin8/1
IC4
IC3
IC2
IC1

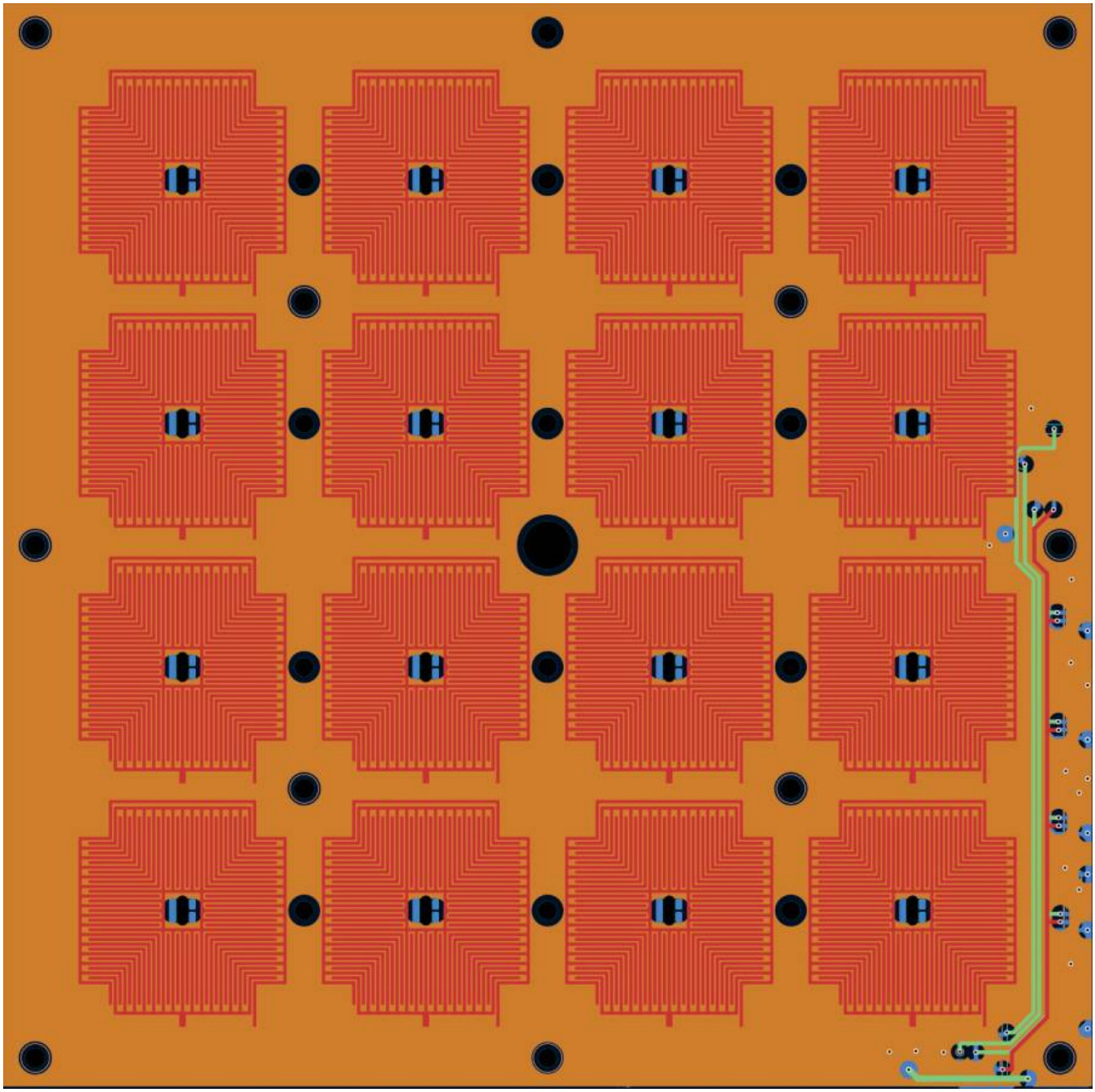

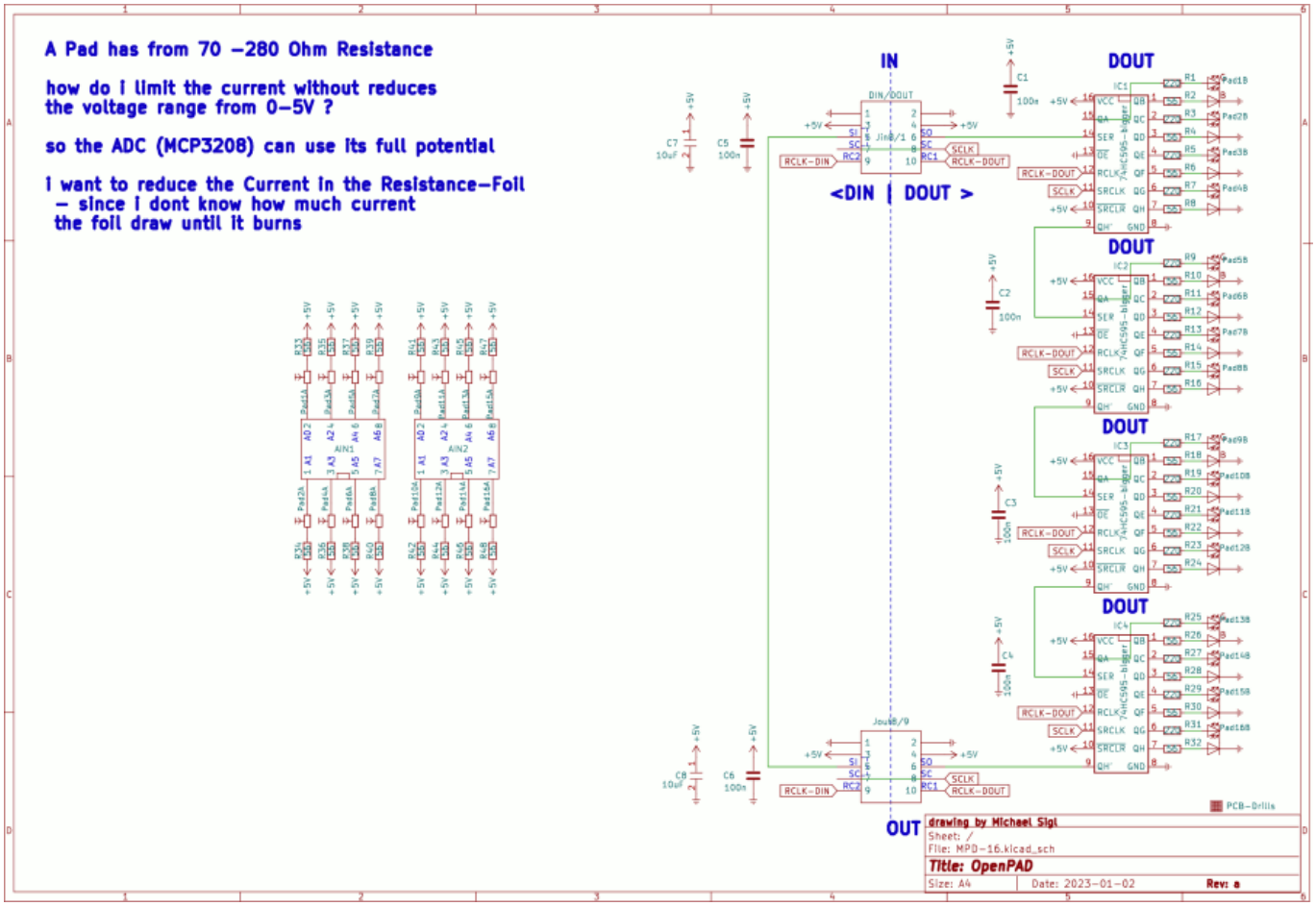

BOM

Order from mpcstuff.com:
Resisitive Foil
MPD-Pad

From:
https://wiki.midibox.org/ - **MIDIbox**

Permanent link:
https://wiki.midibox.org/doku.php?id=openpad&rev=1672692258

Last update: **2023/01/02 20:44**