OpenPAD

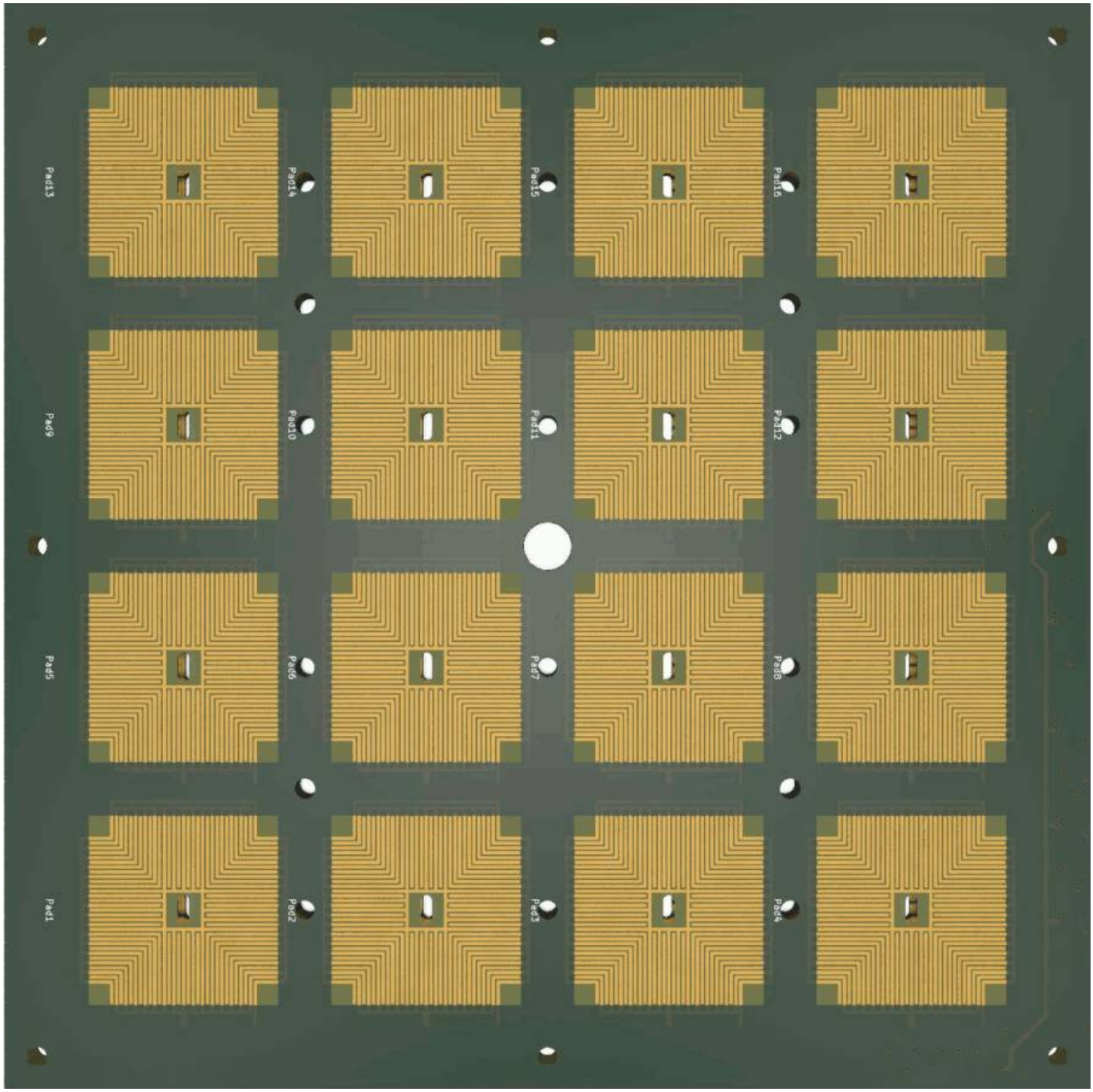
Pad13
Pad14
Pad15
Pad16
Pad9
Pad10
Pad11
Pad12
Pad5
Pad6
Pad7
Pad8
Pad1
Pad2
Pad3
Pad4

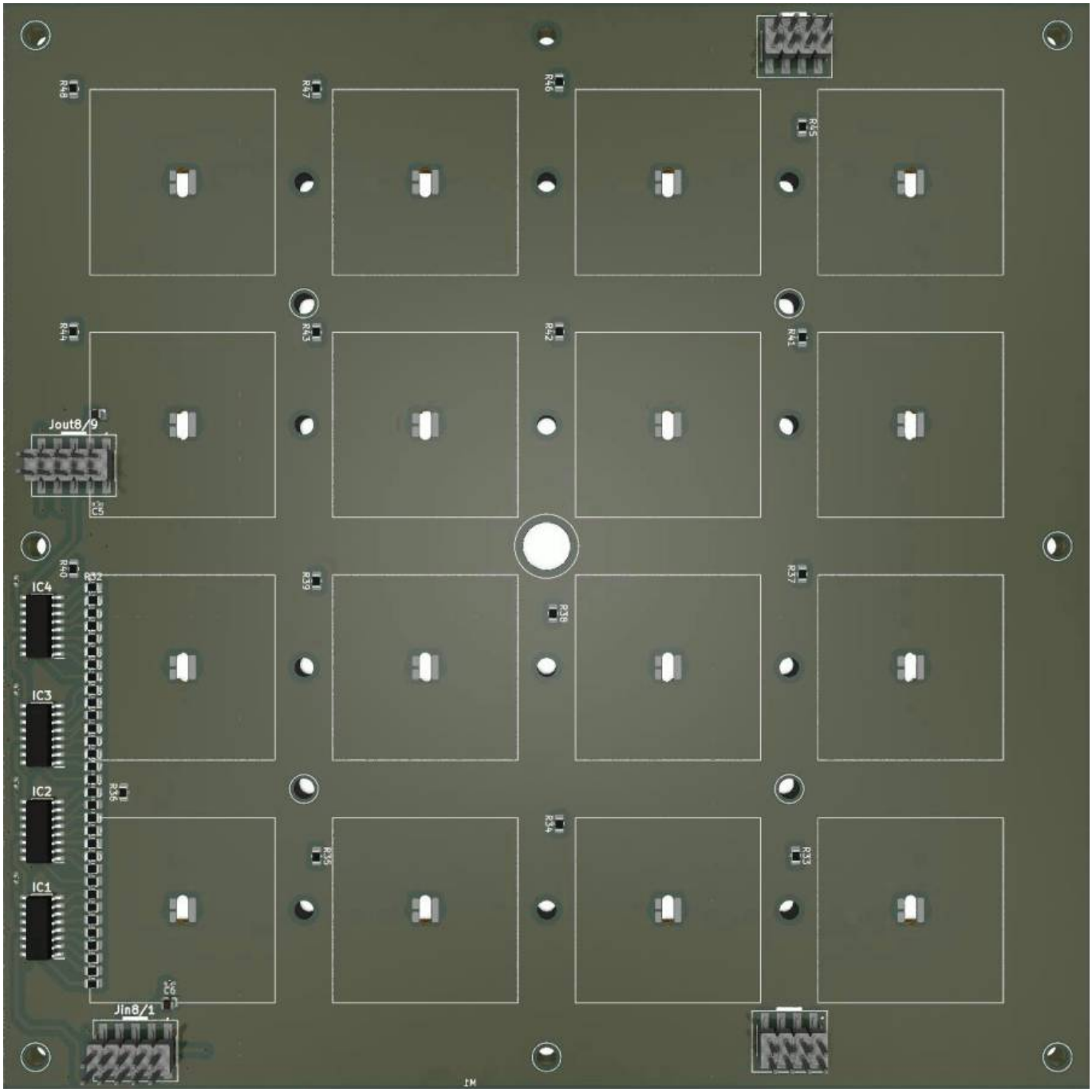
R48
R47
R46
R45
R44
R43
R42
R41
Jout8/9
C5
R40
R39
R38
R37
IC4
IC3
R36
IC2
R35
R34
R33
IC1
C6
Jin8/1

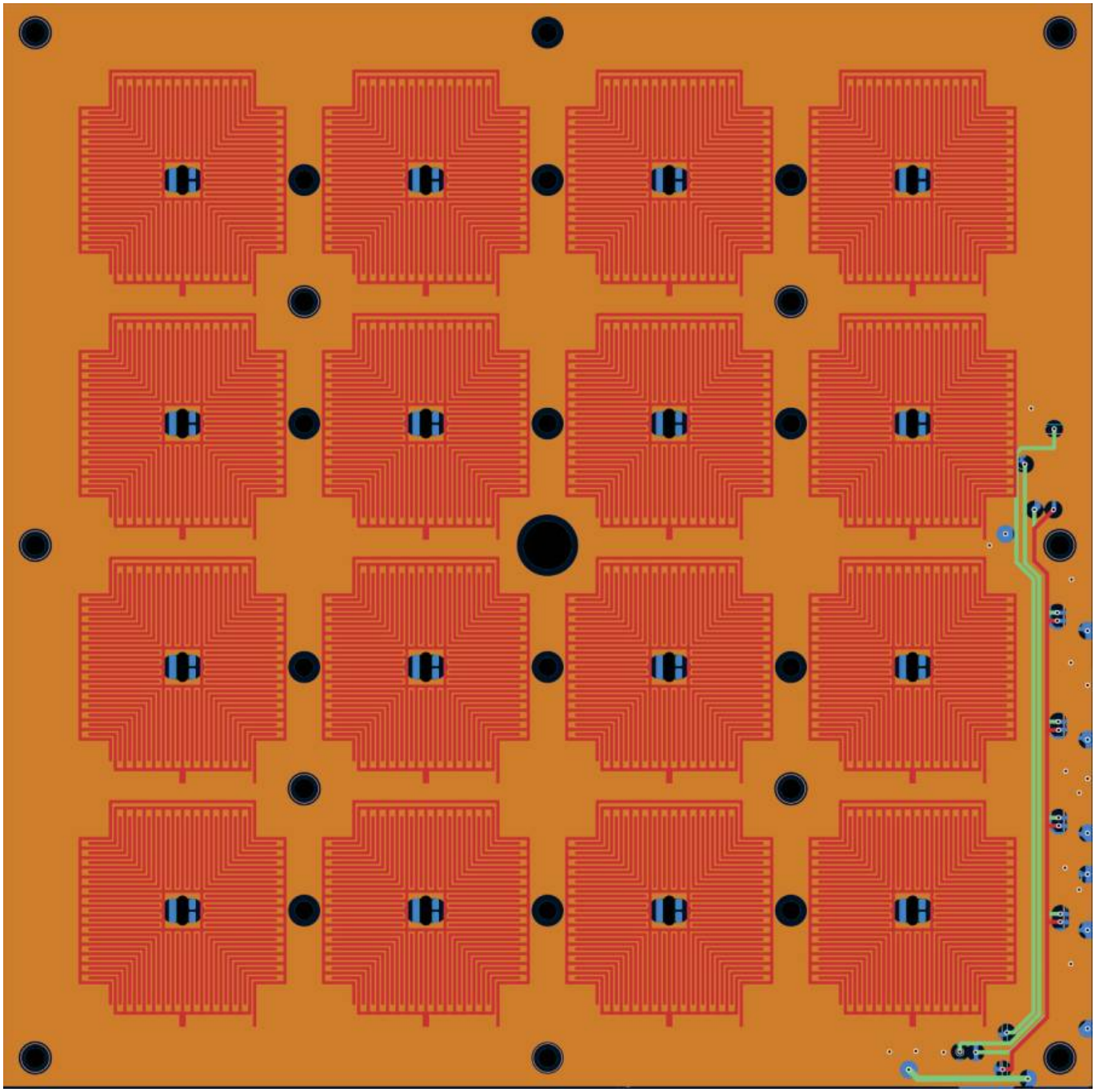

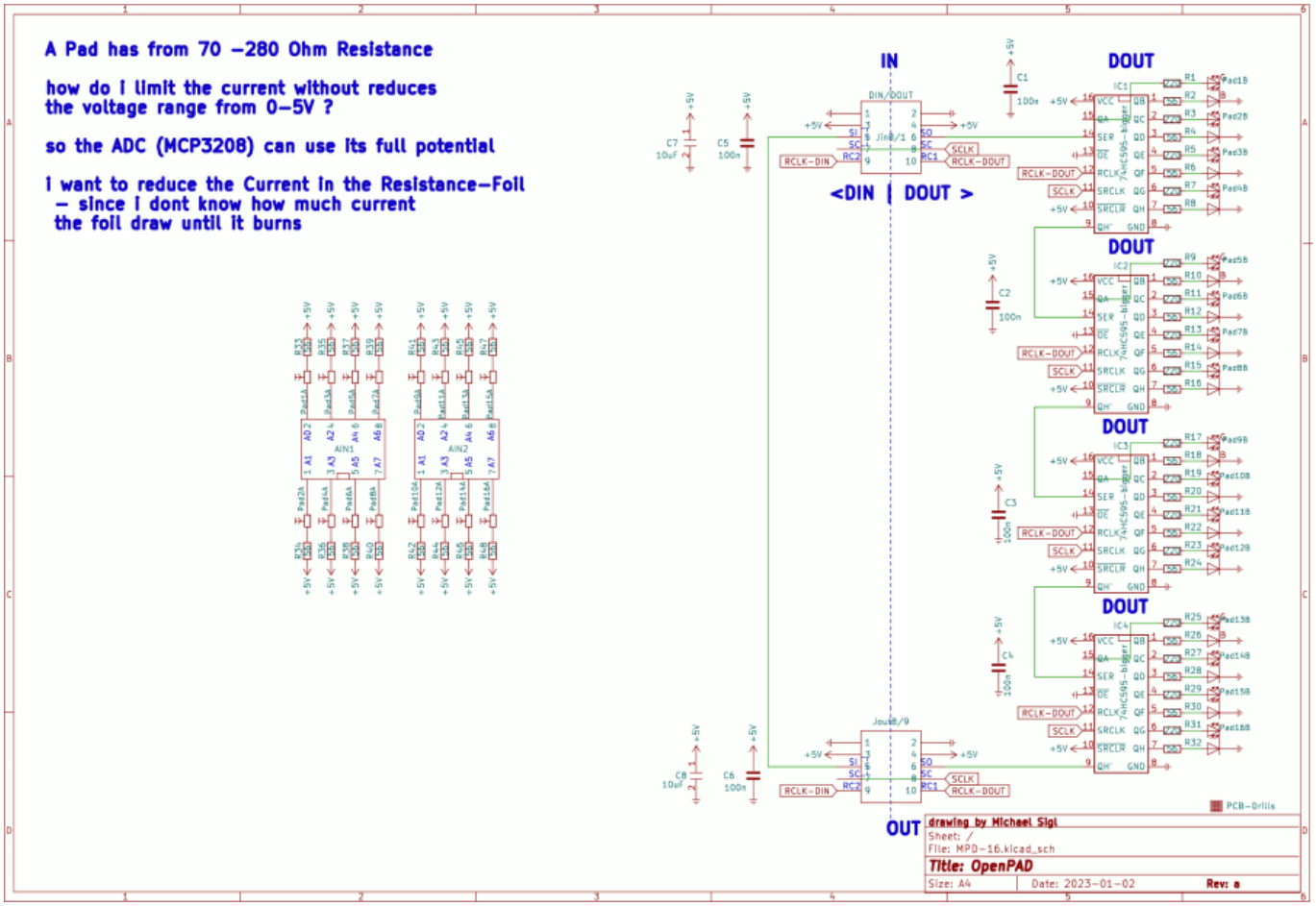

BOM

Order from mpcstuff.com:
Resisitive Foil
Phatter MPD-Pad
or
Standard MPD-PAD

From:
https://wiki.midibox.org/ - **MIDIbox**

Permanent link:
https://wiki.midibox.org/doku.php?id=openpad&rev=1672692423

Last update: **2023/01/02 20:47**