OpenPAD

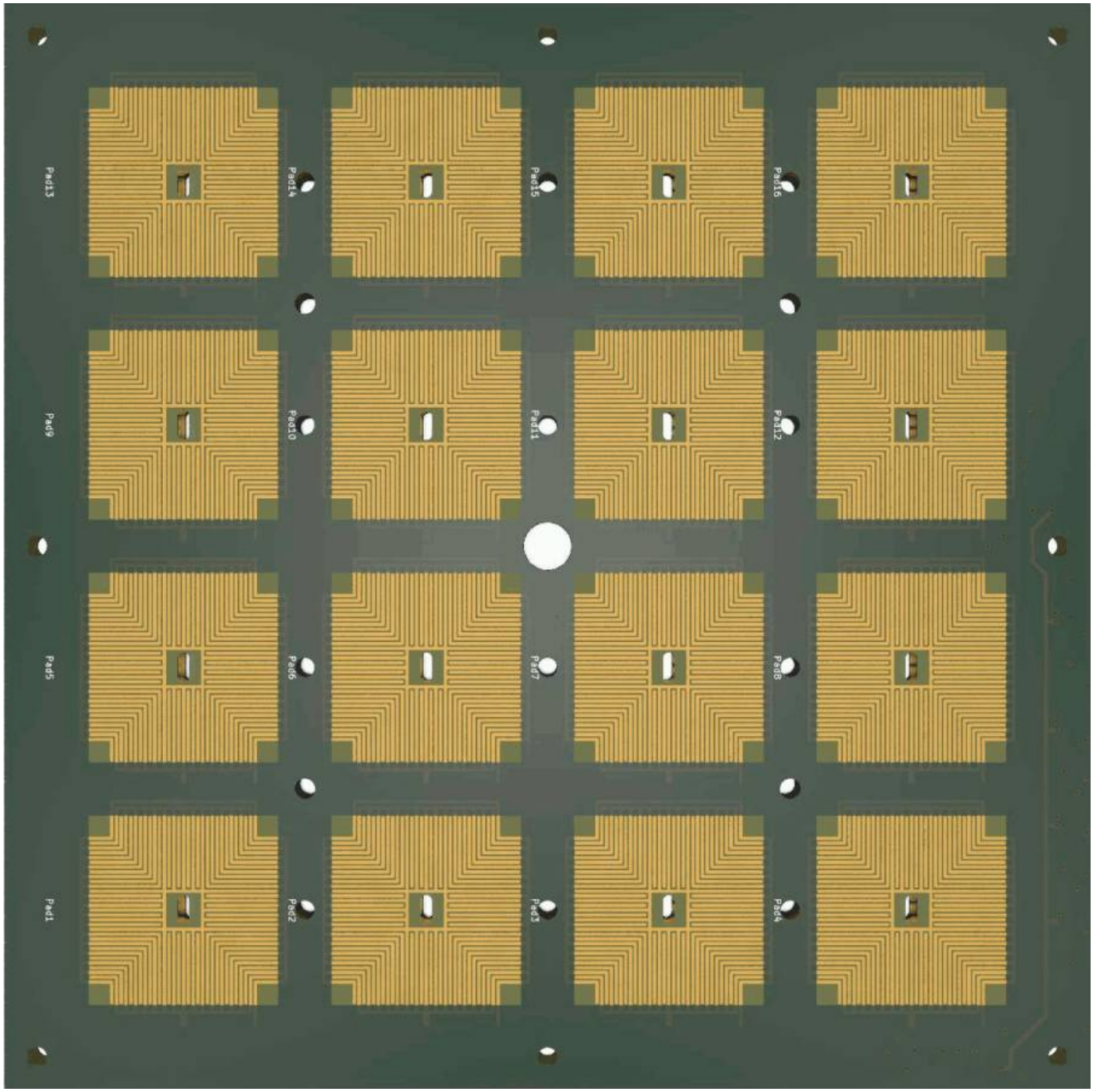
Pad13
Pad14
Pad15
Pad16
Pad9
Pad10
Pad11
Pad12
Pad5
Pad6
Pad7
Pad8
Pad1
Pad2
Pad3
Pad4

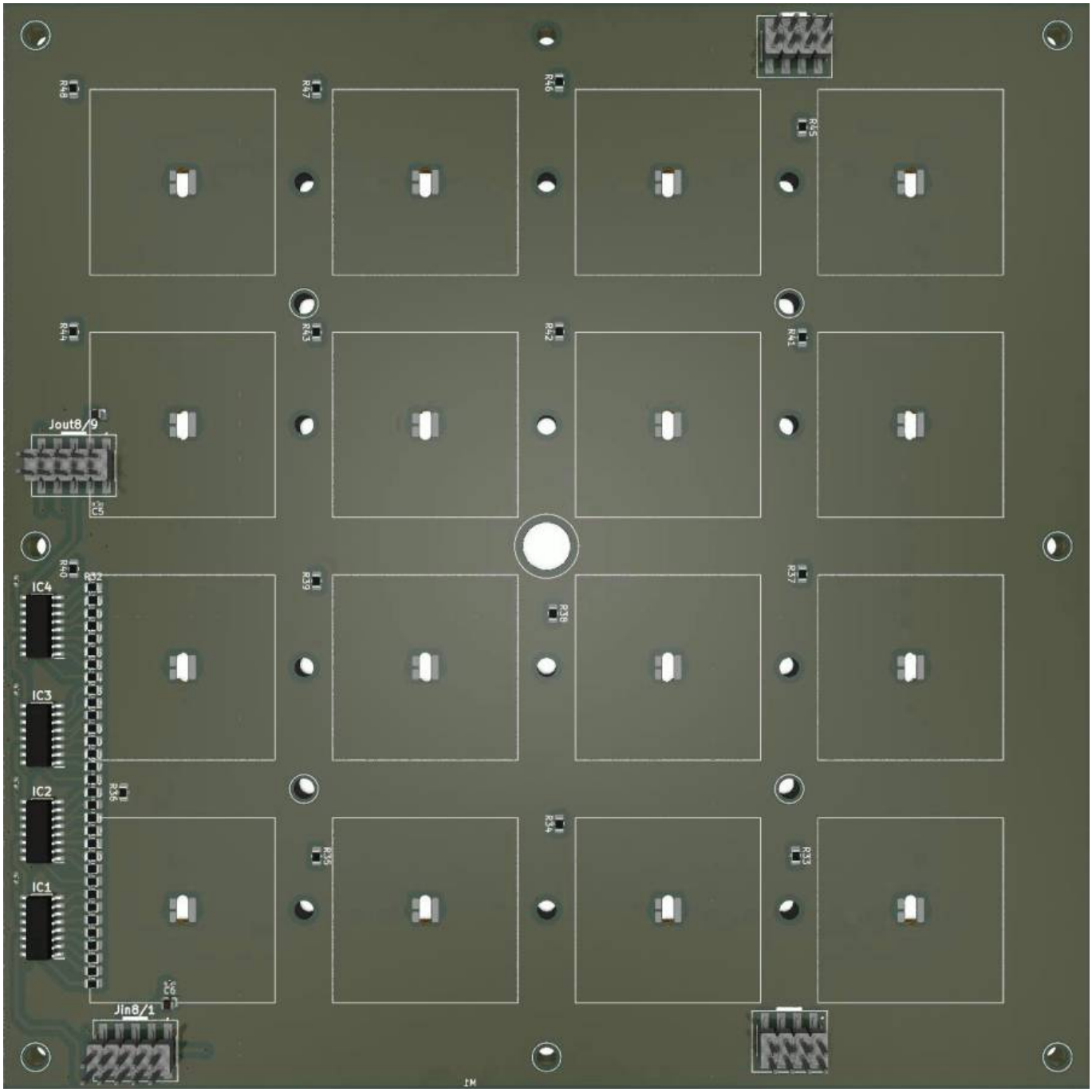
Jout8/9
Jin8/1
IC4
IC3
IC2
IC1

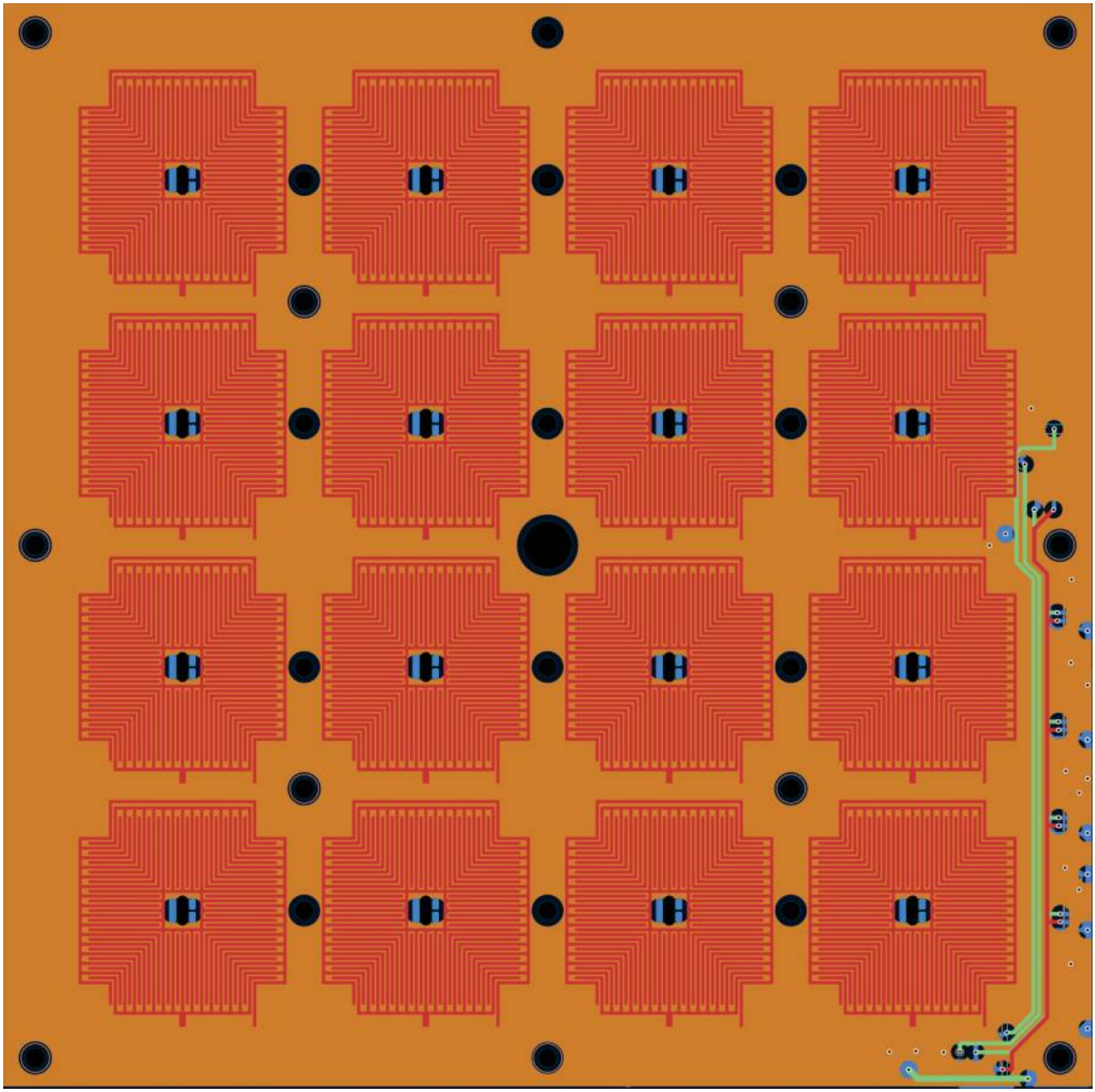

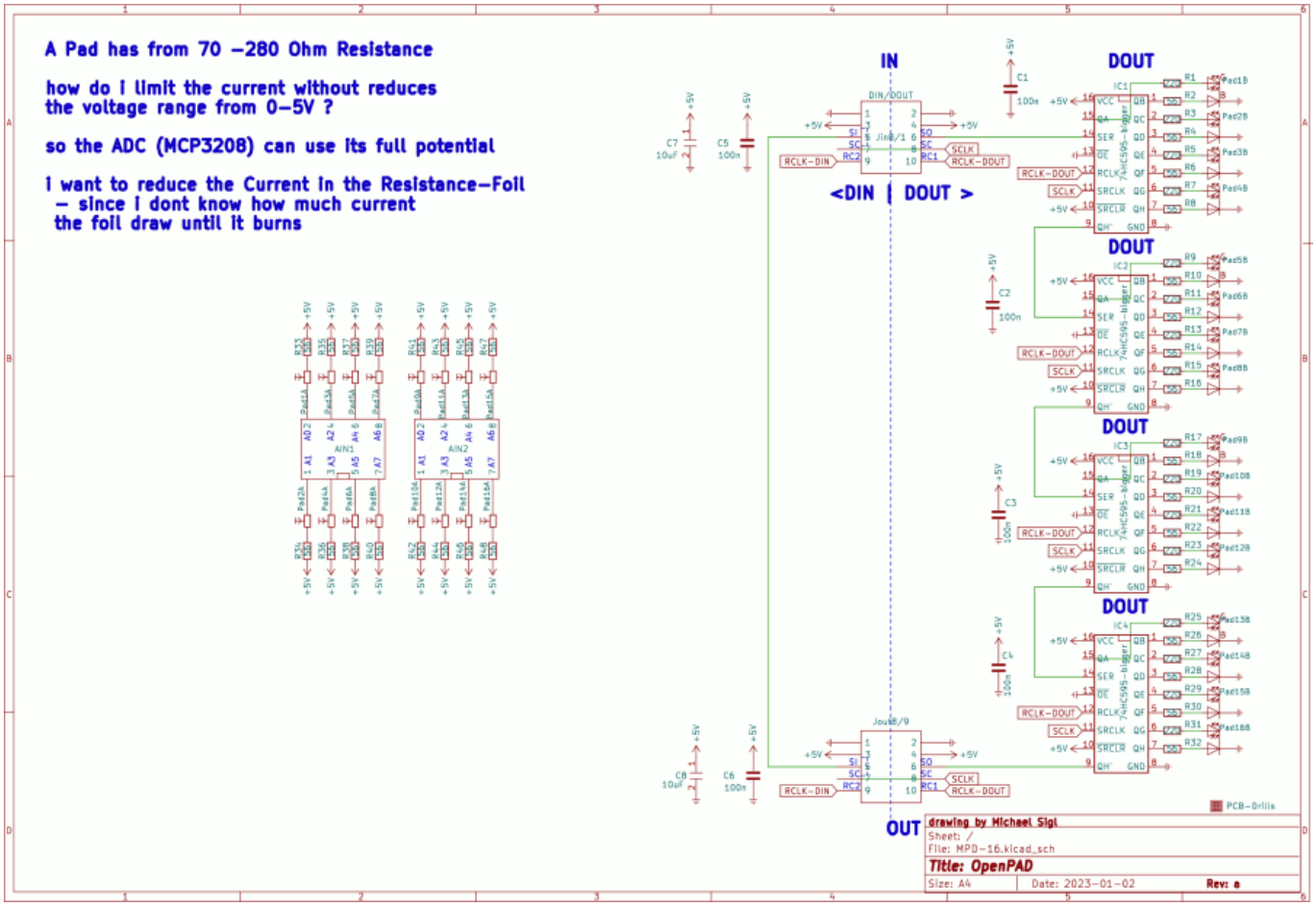

BOM

Order from mpcstuff.com:
Resisitive Foil
Phatter MPD-Pad
or
Standard MPD-PAD

2x Ainser8 or simular MCP3208 based Boards

MIOS32 Core - or simular Stm32F4 based Boards

From:
https://wiki.midibox.org/ - **MIDIbox**

Permanent link:
https://wiki.midibox.org/doku.php?id=openpad&rev=1672693695

Last update: **2023/01/02 21:08**