OpenPAD

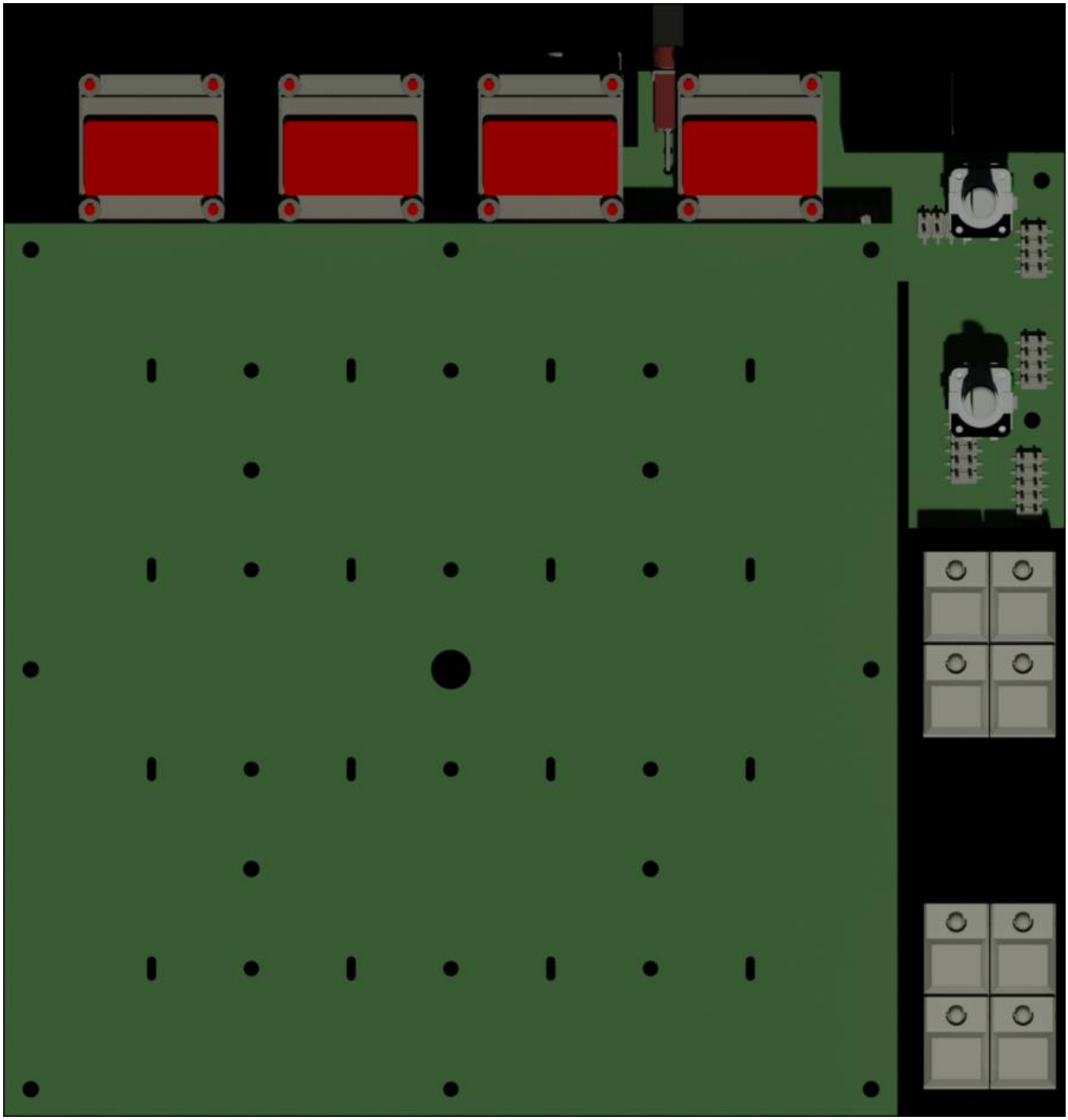

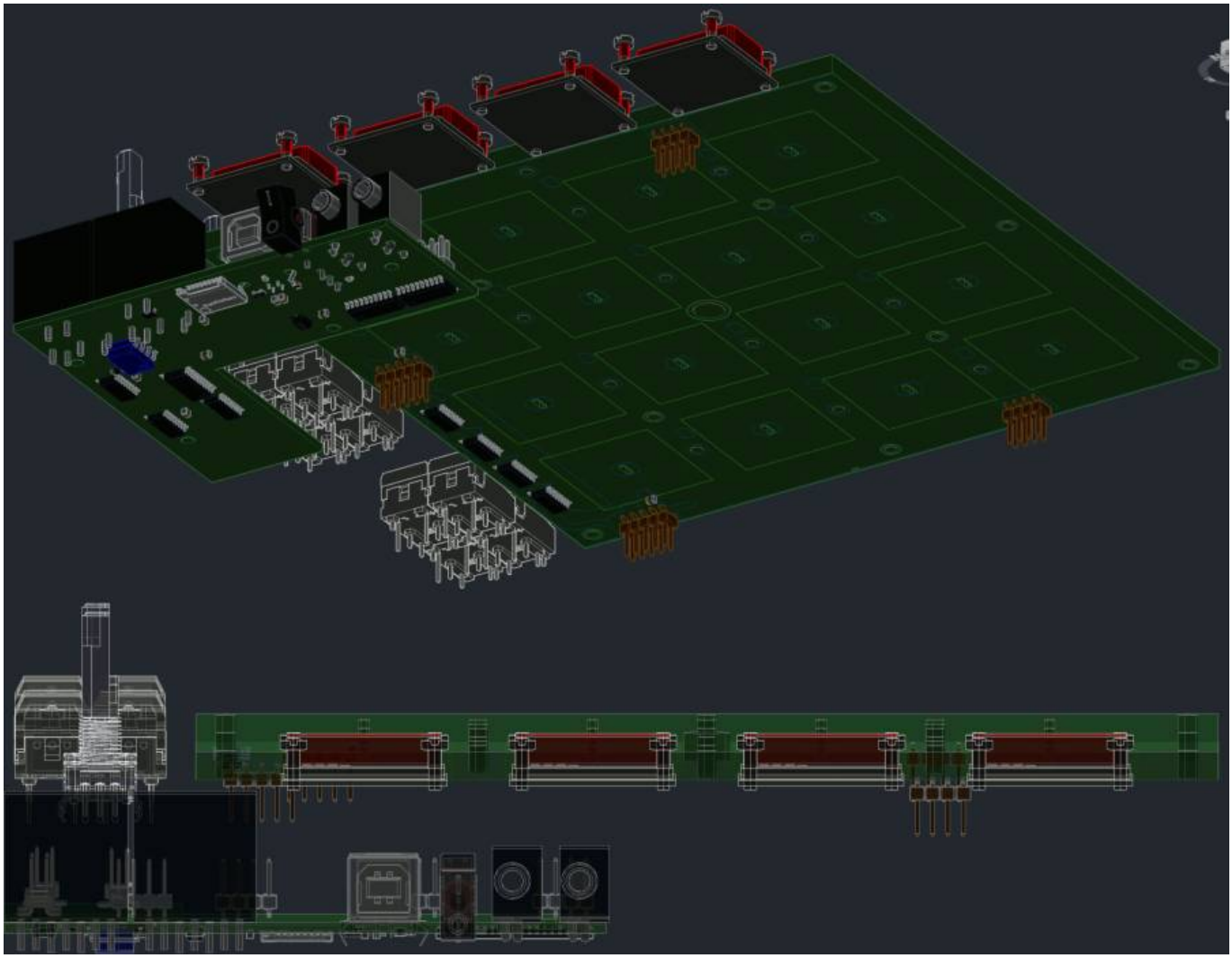

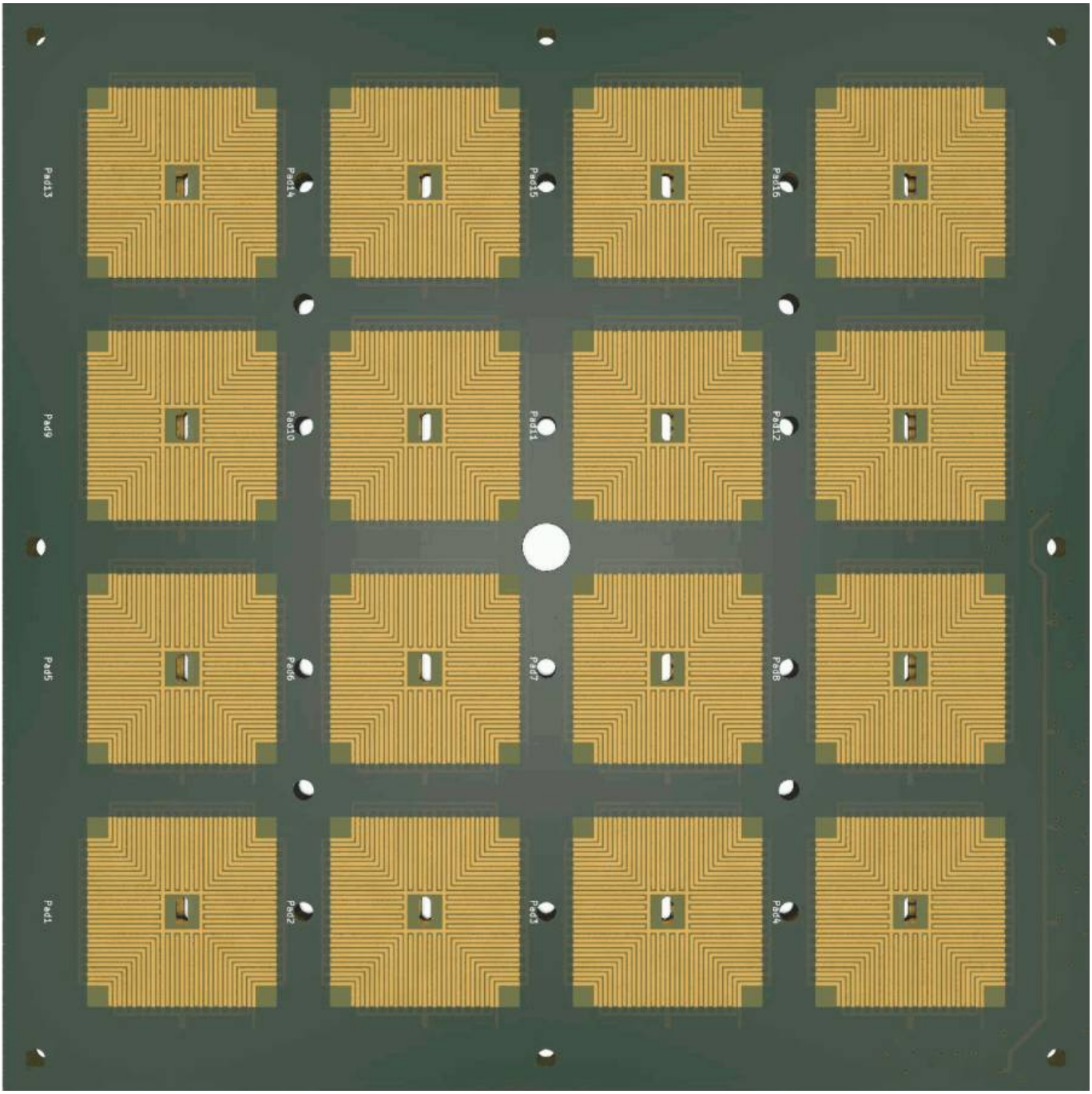
Pad13
Pad14
Pad15
Pad16
Pad9
Pad10
Pad11
Pad12
Pad5
Pad6
Pad7
Pad8
Pad1
Pad2
Pad3
Pad4

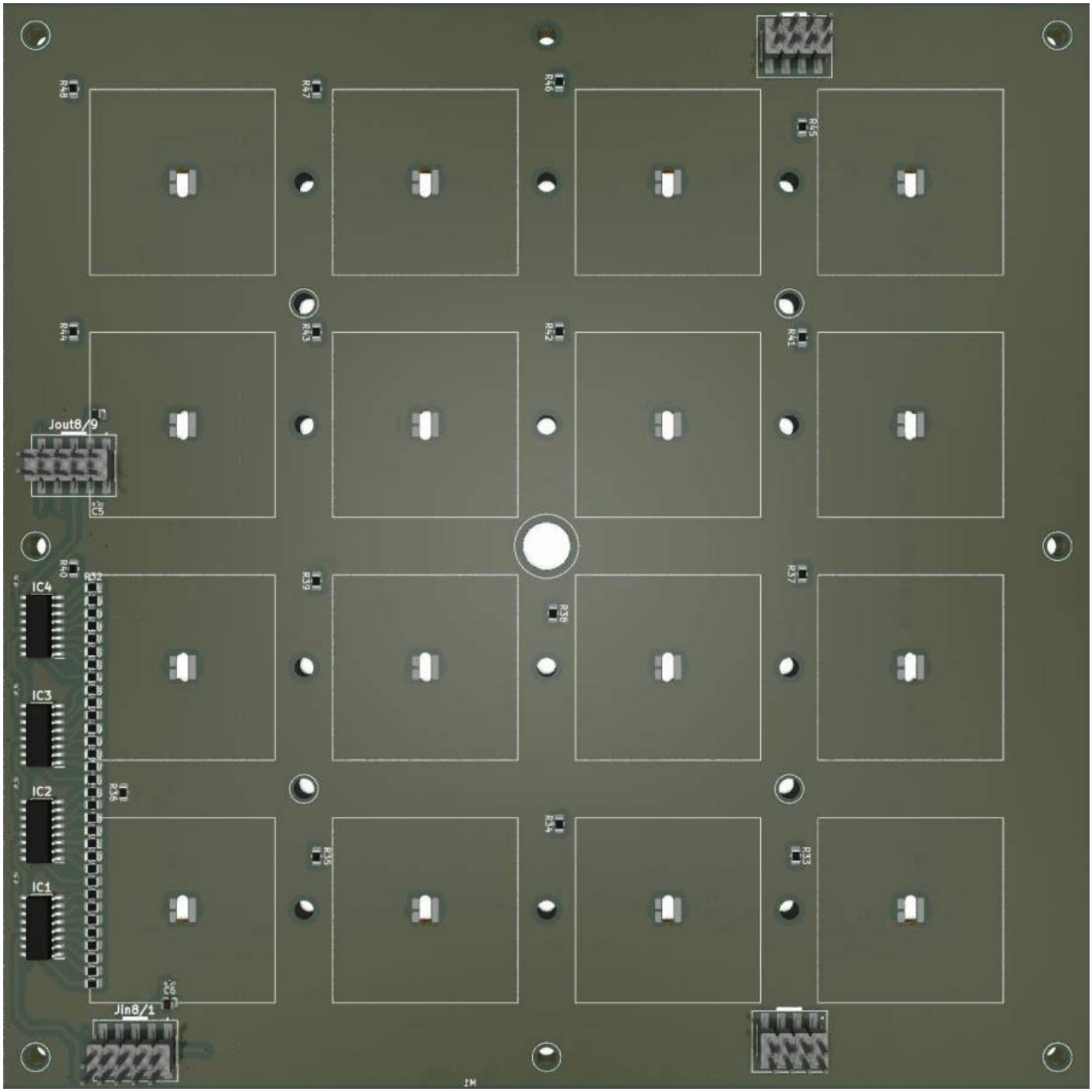
Jout8/9
Jin8/1
IC4
IC3
IC2
IC1

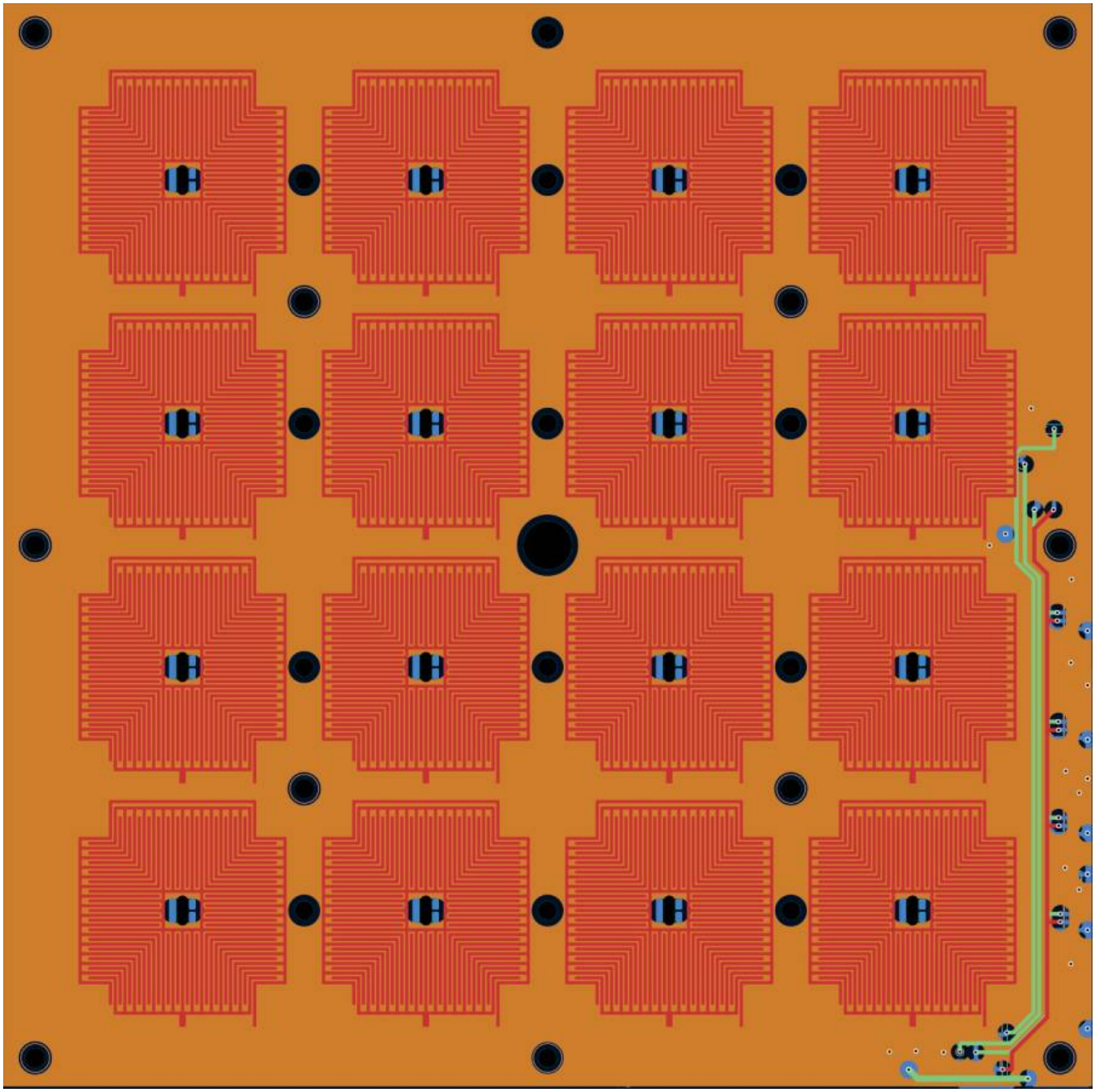

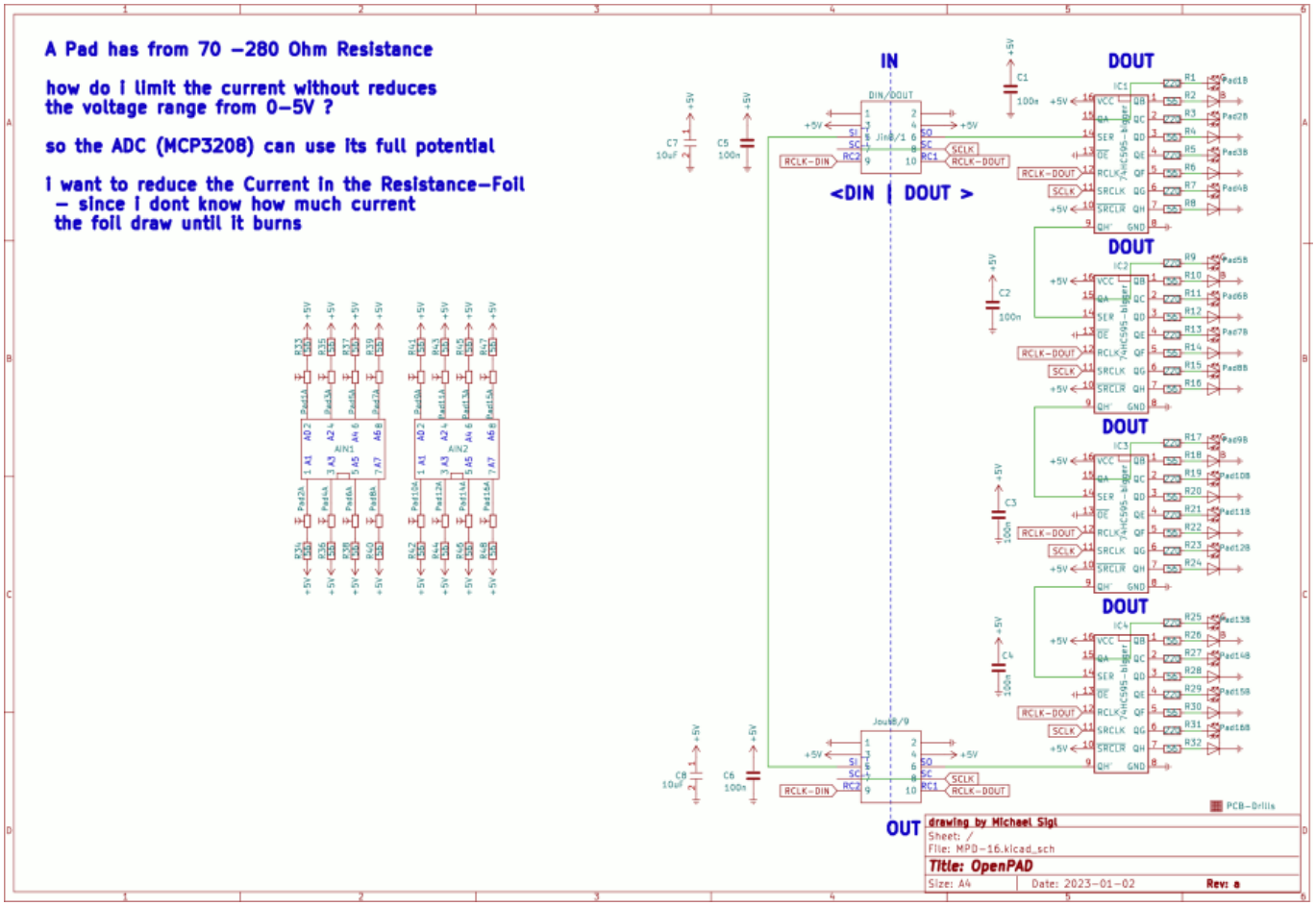

BOM

Order from mpcstuff.com:
Resisitive Foil
Phatter MPD-Pad
or
Standard MPD-PAD

PCBs:

- OpenPAD First concept off using the MPD 226 Pads and Foil with custom PCB, with MIOS!
- DoutX2DinX1 SMD board with free Production Files- can be used for other project too.
- OpenPAD-Codeblock Buttons and Encoder Board - in combination with DoutX2DinX1 Free Files!
- Core4OpenPAD A STM32F407VGT6 based Board - Pick and Place

From:
https://wiki.midibox.org/ - **MIDIbox**

Permanent link:
https://wiki.midibox.org/doku.php?id=openpad&rev=1673227420

Last update: **2023/01/09 01:23**