OpenPAD Codeblock

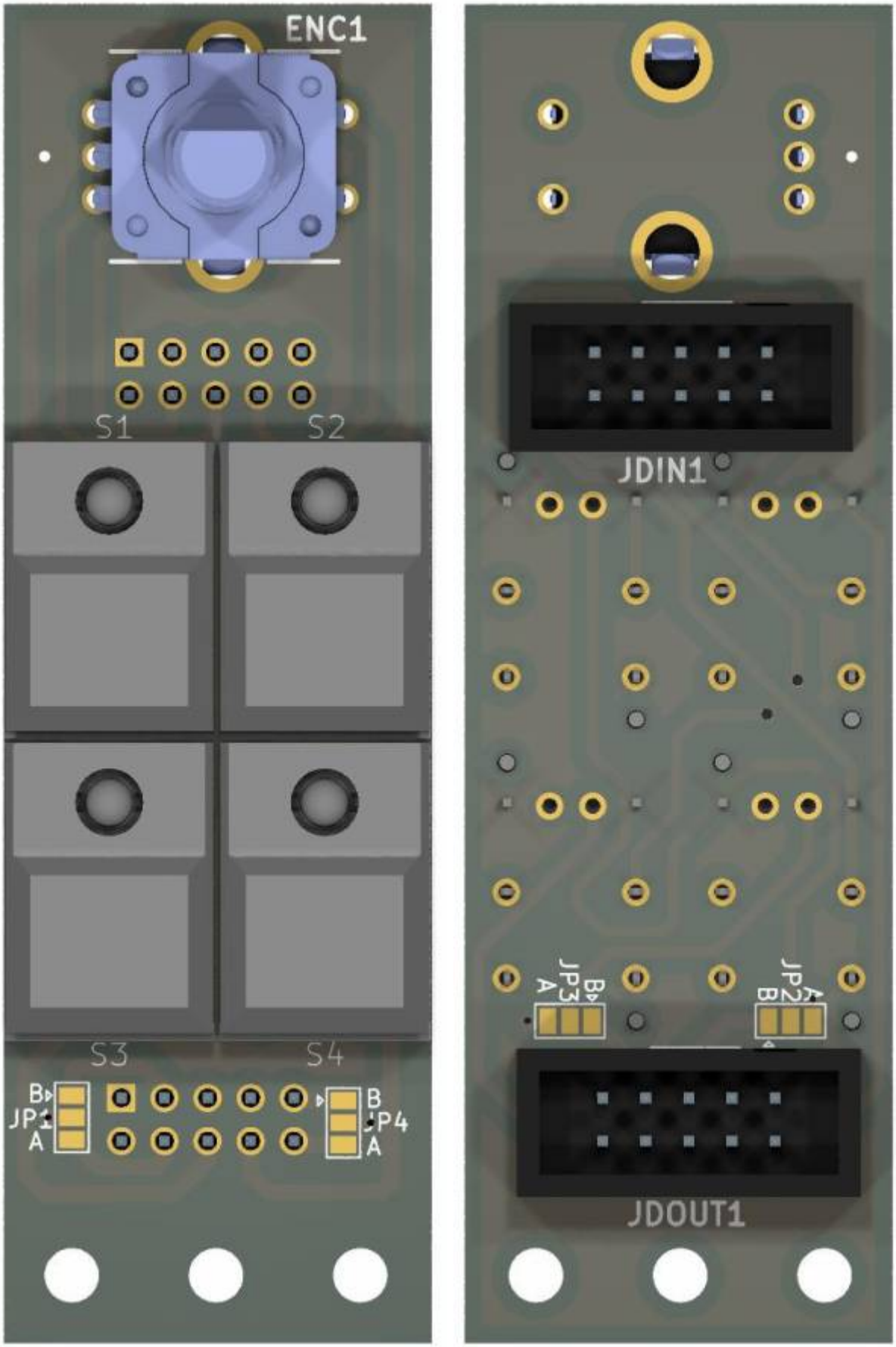

this is one essential part for my OpenPAD
it handles the Menue and the Buttons...

Shematic

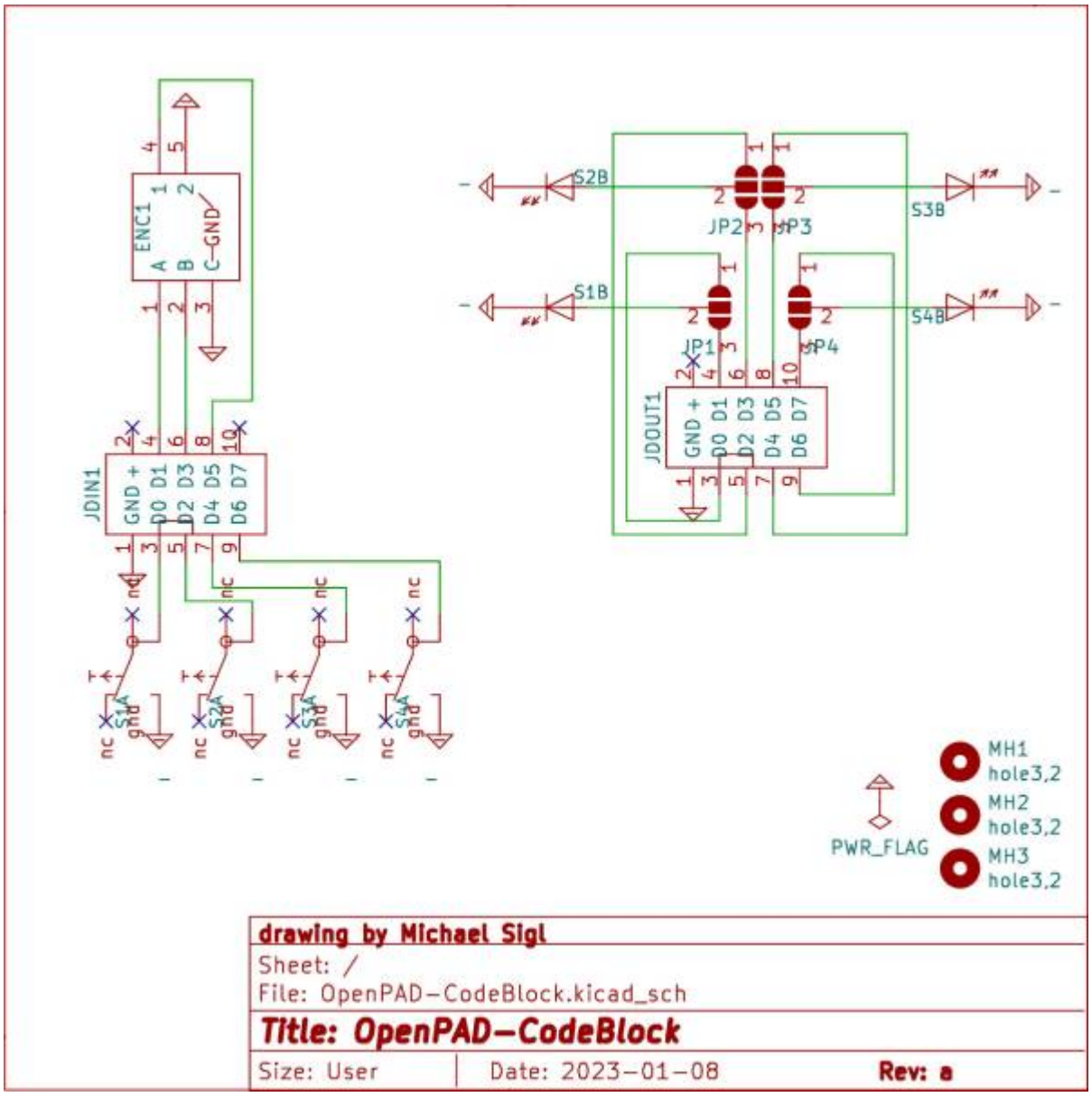

Building and BOM

100 THT, and handsolder
This PCB is needet 2x for OpenPAD

BOM

qty	reference	value	mouser
1	ENC	PEC11R-4015F-S0024	652-PEC11R-4015F-S24
2	JDIN1, JDOUT1,	Pin-Header-Shroudet-2×5-THT-DIN	517-30310-6002

Order-List

copy following list into this mouser.com-Link

```
652-PEC11R-4015F-S24|1
```

Order from Reichelt:
5x Button
2x PinHeader 2x5Pin Female

Order from Midiphy:
1x Knob SetDK16-190V3 knob

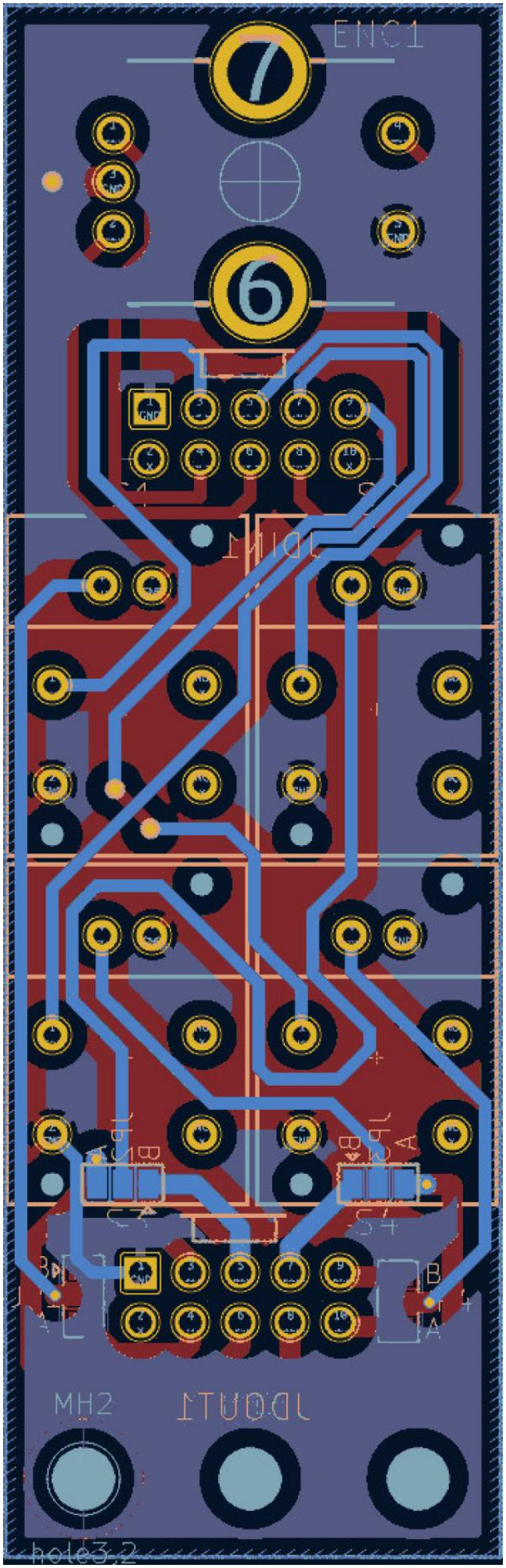
ENC1
7
6
MH2
hole3.2

To Do

waiting for the Prototype

Community users working on it

- **Phatline** = PCB & Shematic, UI-Programming, Documentation...

Just let a Private message on the forum to user already involved.
or join the forum: Triggermatrix 5

From:
https://wiki.midibox.org/ - **MIDIbox**

Permanent link:
https://wiki.midibox.org/doku.php?id=openpad-codeblock&rev=1673220314

Last update: **2023/01/08 23:25**