# OpenPAD Codeblock

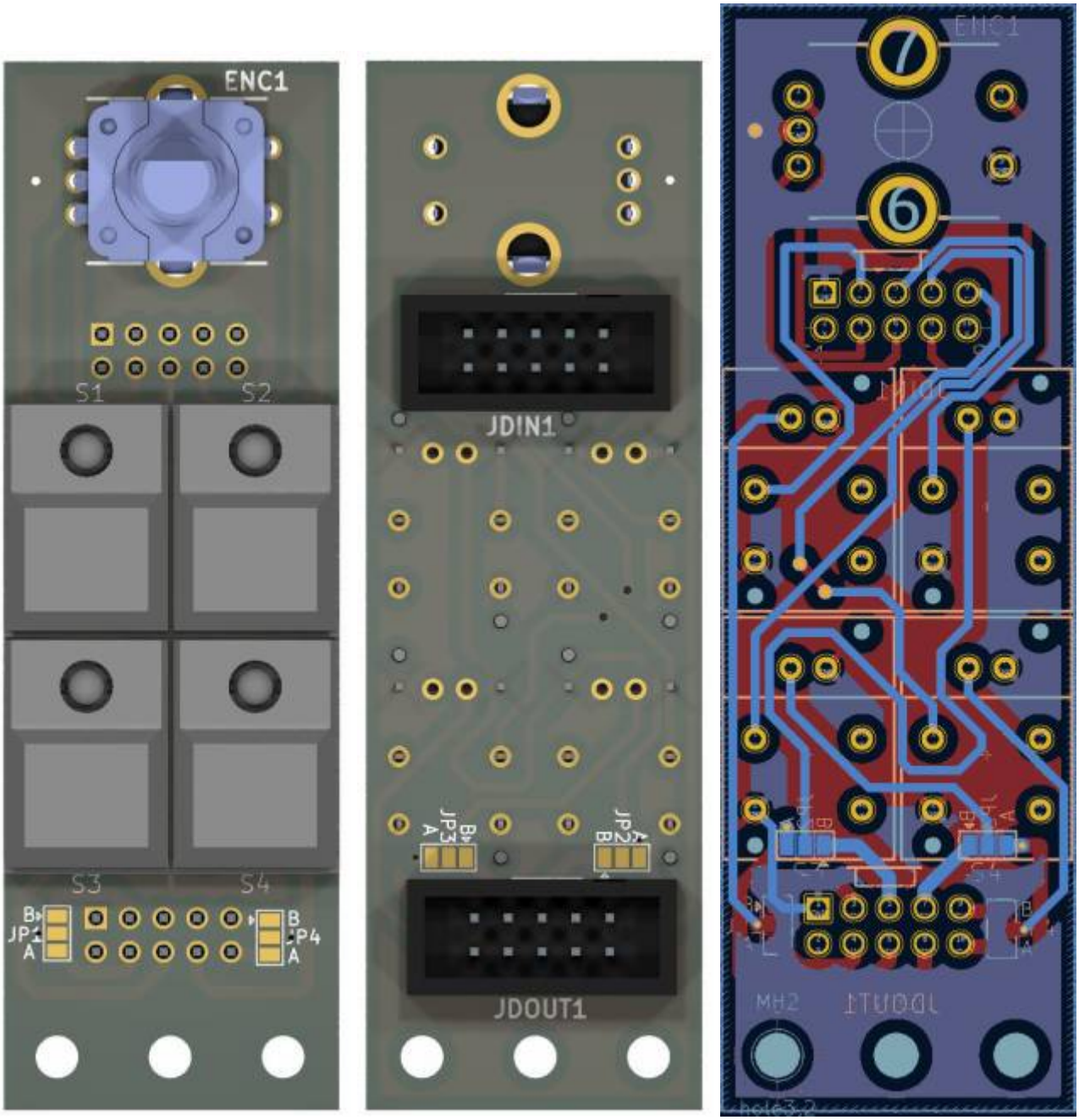


this is one essential part for my OpenPAD
it handles the Menue and the Buttons...

# Shematic

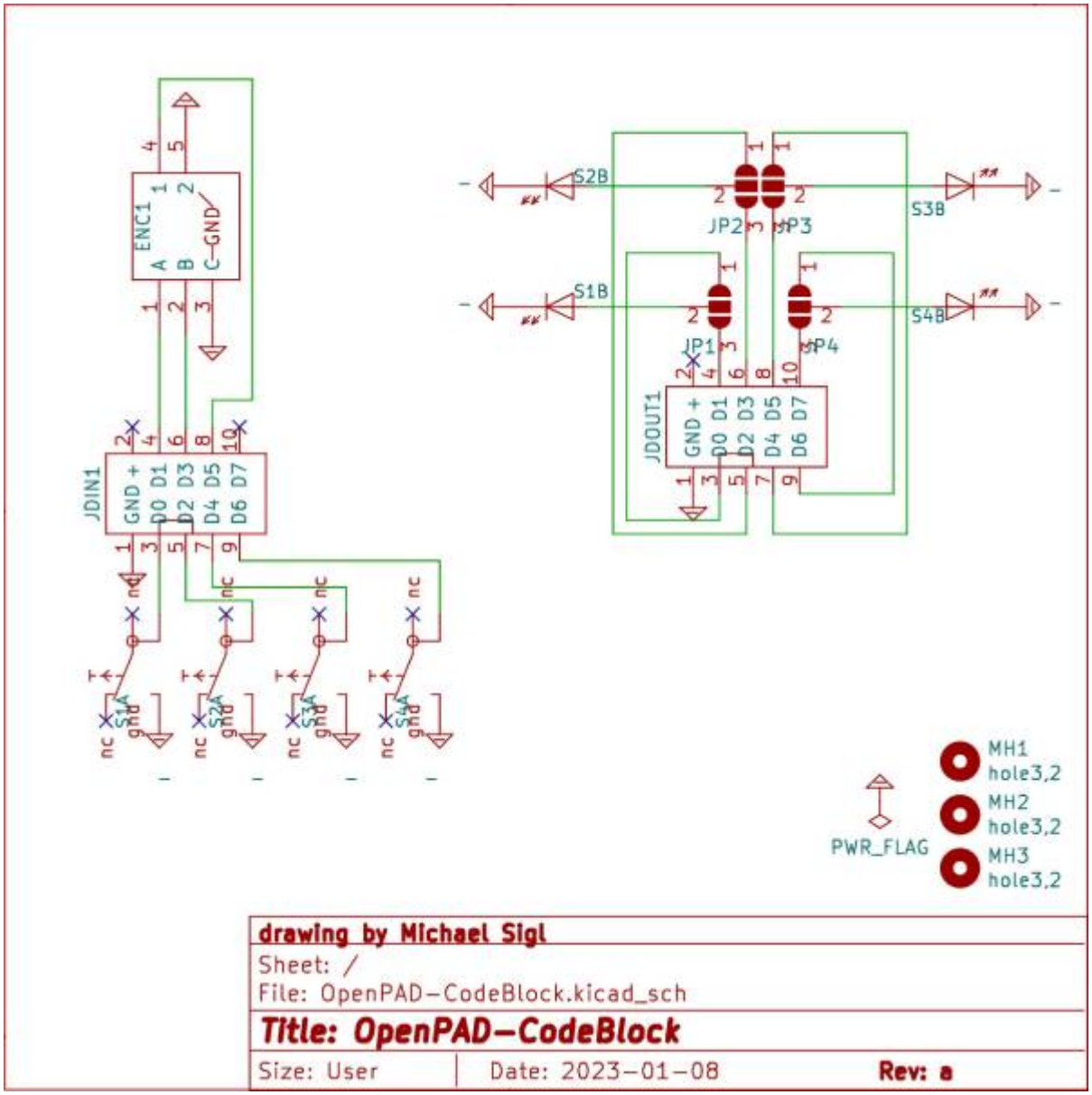


# Building and BOM

THT, and handsolder
This PCB is needet 2x for OpenPAD

## BOM

| qty | reference | value | mouser |
|---|---|---|---|
| 1 | ENC | PEC11R-4015F-S0024 | 652-PEC11R-4015F-S24 |
| 2 | JDIN1, JDOUT1, | Pin-Header-Shroudet-2×5-THT-DIN | 517-30310-6002 |

## Order-List

copy following list into this mouser.com-Link

```
652-PEC11R-4015F-S24|1
```

**Order from Reichelt:**
5x Button
2x PinHeader 2x5Pin Female

**Order from Midiphy:**
1x Knob SetDK16-190V3 knob

# To Do

waiting for the Prototype

# Community users working on it

- **Phatline** = PCB & Shematic, UI-Programming, Documentation...

Just let a Private message on the forum to user already involved.
or join the forum: Triggermatrix 5

From:
https://wiki.midibox.org/ - **MIDIbox**

Permanent link:
**https://wiki.midibox.org/doku.php?id=openpad-codeblock&rev=1673220449**

Last update: **2023/01/08 23:27**