# OpenPAD Codeblock

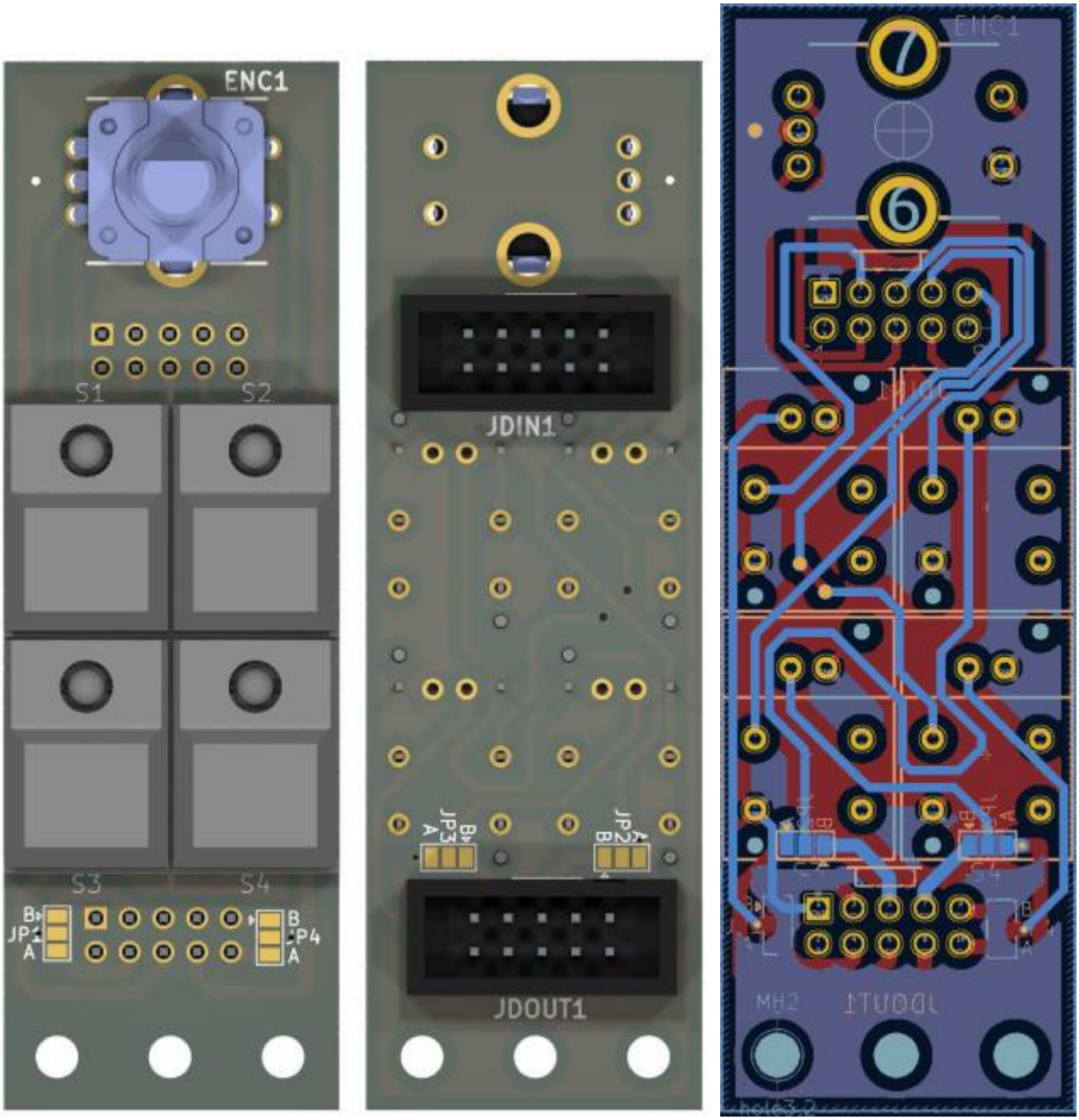


this is one essential part for my OpenPAD
it handles the Menue and the Buttons...

# Shematic

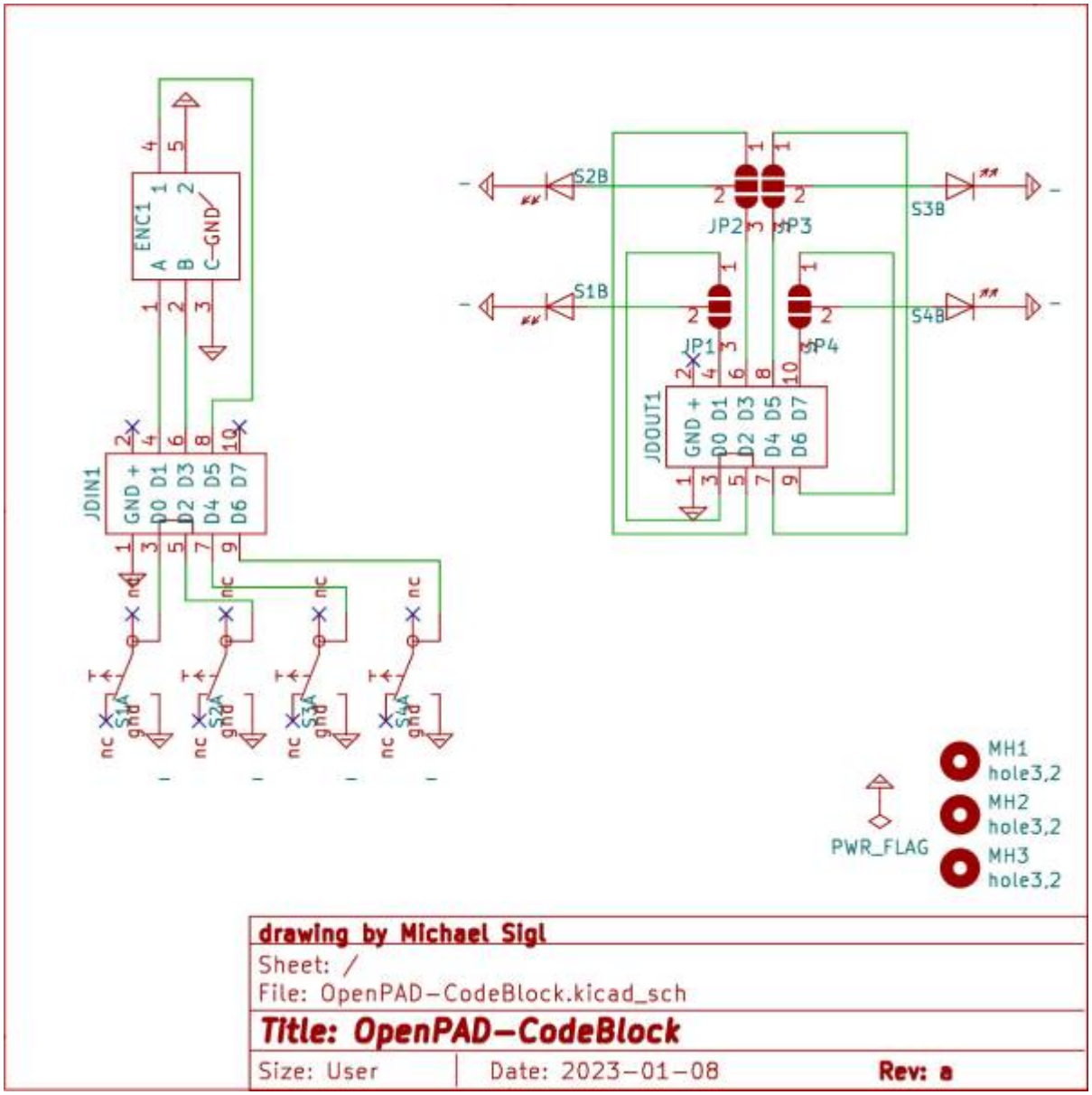


# Building and BOM

THT, and handsolder
This PCB is needet 2x for OpenPAD

## Order-List

copy following list into this mouser.com-Link

```
652-PEC11R-4015F-S24|1
```

**Order from Reichelt:**

4x Button
2x PinHeader 2x5Pin Female

**Order from Midiphy:**
1x Knob SetDK16-190V3 knob

# To Do

waiting for the Prototype

# Community users working on it

- **Phatline** = PCB & Shematic, UI-Programming, Documentation...

Just let a Private message on the forum to user already involved.
or join the forum: OpenPAD

From:
https://wiki.midibox.org/ - **MIDIbox**

Permanent link:
**https://wiki.midibox.org/doku.php?id=openpad-codeblock&rev=1673223775**

Last update: **2023/01/09 00:22**