OpenPAD Codeblock

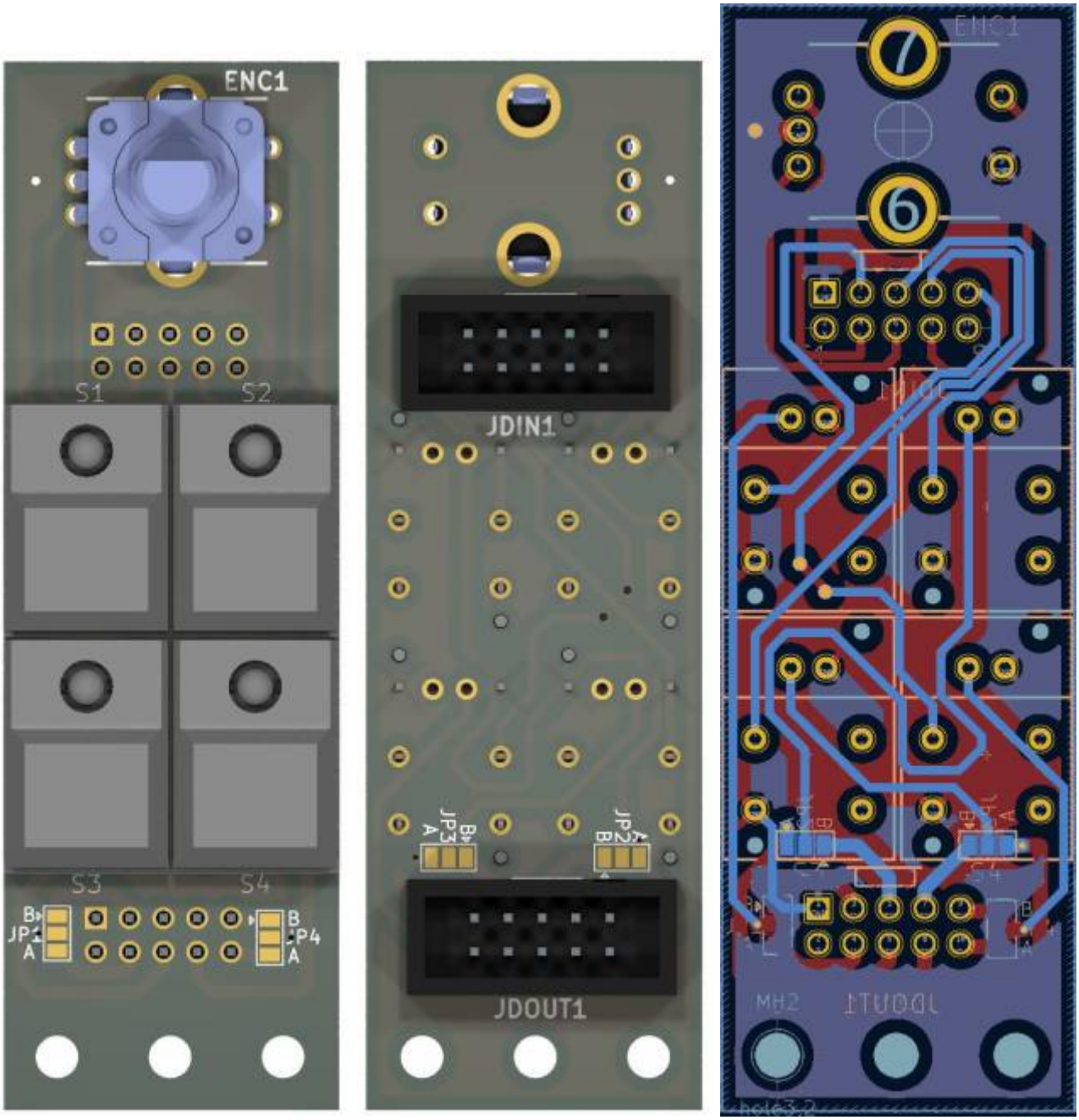

this is one essential part for my OpenPAD
it handles the Menue and the Buttons...

Shematic

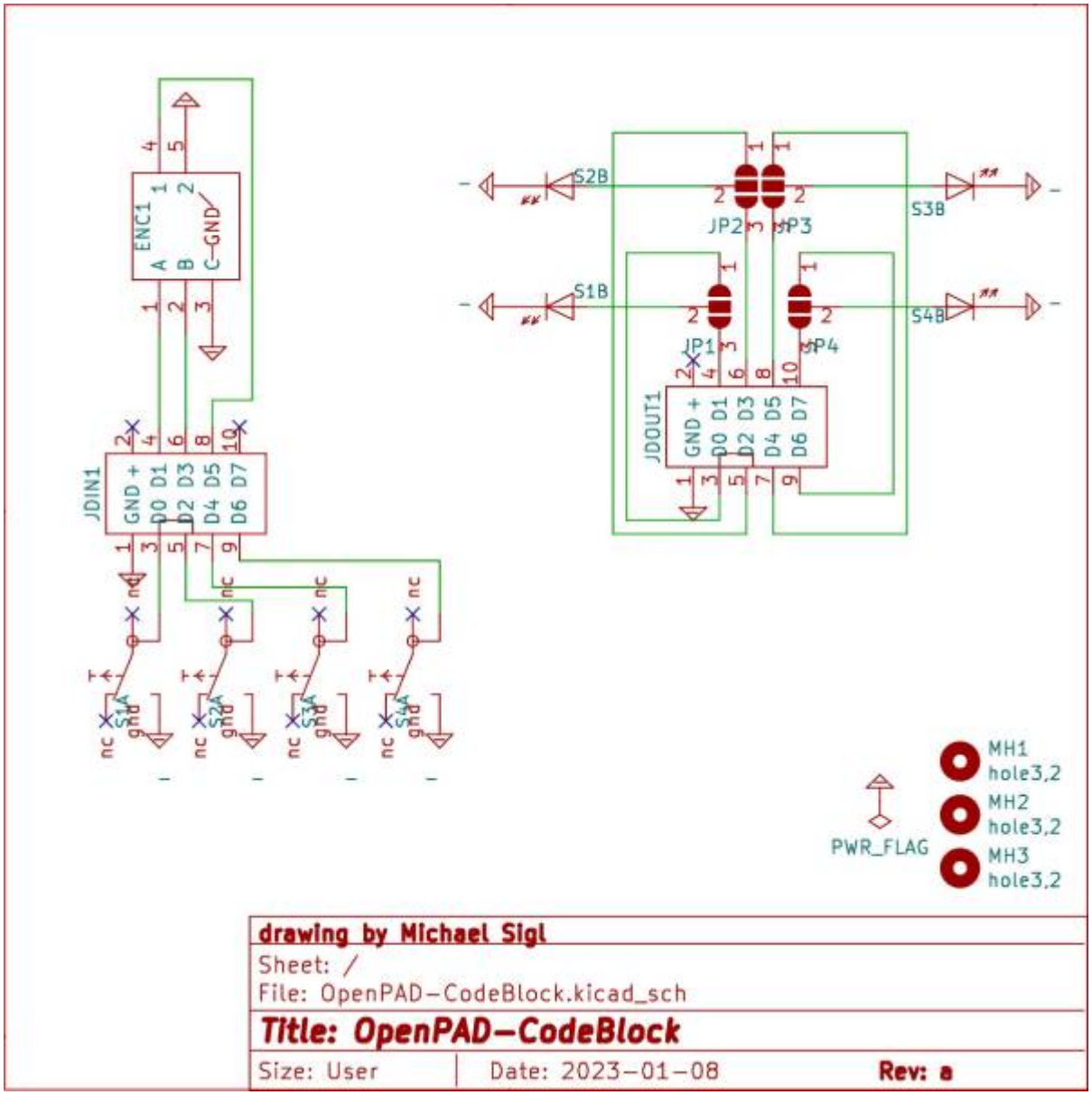

Building and BOM

THT, and handsolder
This PCB is needet 2x for OpenPAD

Production Files

Free4Real
openpad-codeblock-gerber.zip

Order-List

copy following list into this mouser.com-Link

```
652-PEC11R-4015F-S24|1
710-151031SS06000|4
```

Order from Reichelt:
4x Button
2x PinHeader 2x5Pin Female

Order from Midiphy:
1x Knob SetDK16-190V3 knob

To Do

waiting for the Prototype

Community users working on it

- **Phatline** = PCB & Shematic, UI-Programming, Documentation...

Just let a Private message on the forum to user already involved.
or join the forum: OpenPAD

From:
https://wiki.midibox.org/ - **MIDIbox**

Permanent link:
https://wiki.midibox.org/doku.php?id=openpad-codeblock&rev=1673227199

Last update: **2023/01/09 01:19**