TM5 Codeblock

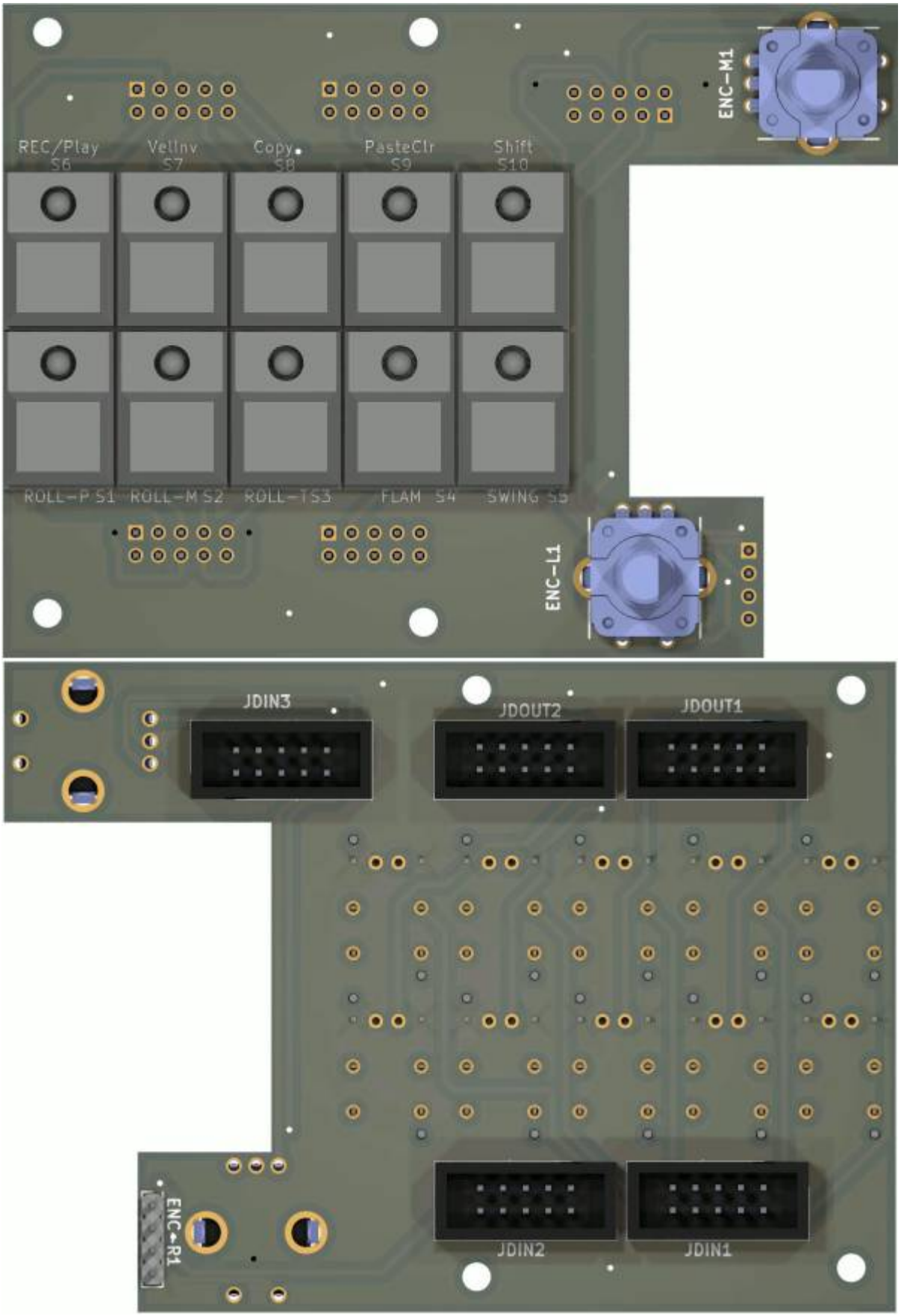

this is one essential part for my triggermatrix5

it handles the Menue and the Buttons...

Shematic

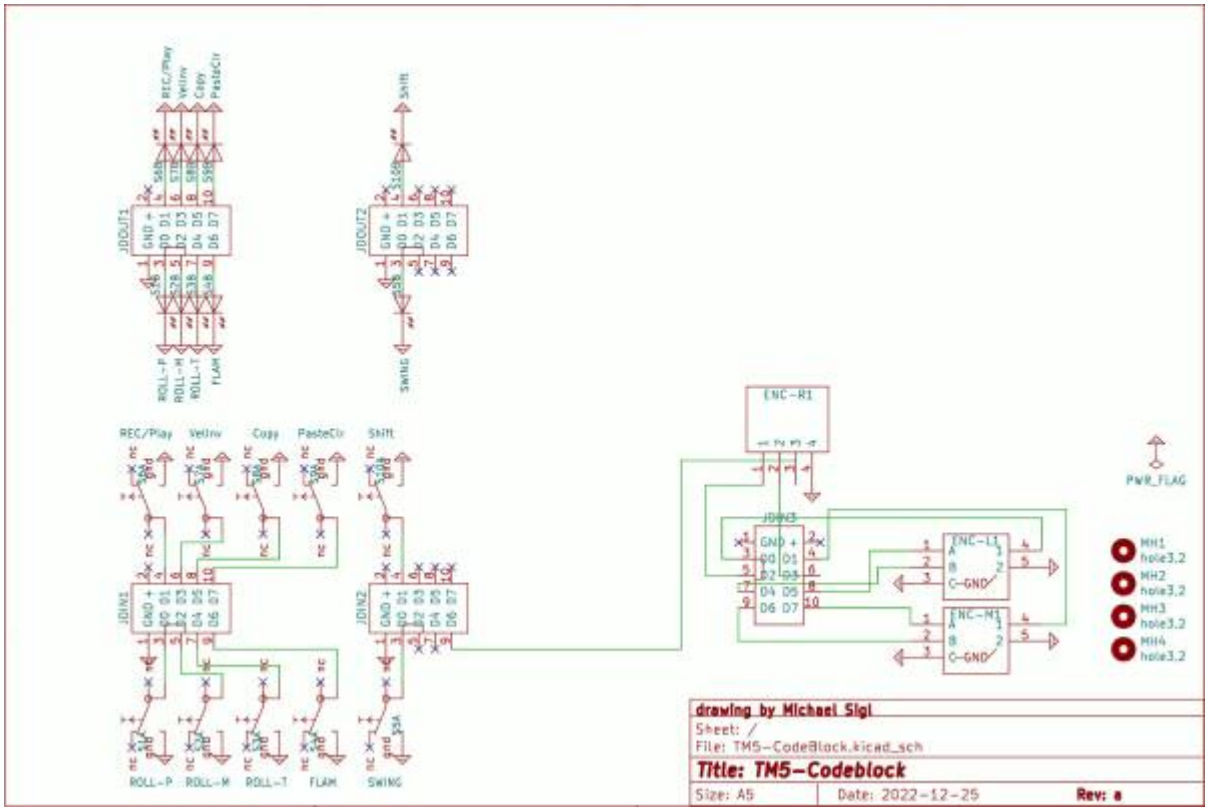

Building and BOM

100 THT, and handsolder

BOM

qty	reference	value	mouser
3	ENC	PEC11R-4015F-S0024	652-PEC11R-4015F-S24
1	ENC-R1	Pin-Head-1×4-Male	649-1012937890401BLF
5	JDIN1, JDIN2, JDIN3, JDOUT1, JDOUT2	Pin-Header-Shroudet-2×5-THT-DIN	517-30310-6002
10	S1-S10	reichelt.de	DTL 2 SW Reichelt!

this gives following Order list which you copy into this mouser.com-Link

```
652-PEC11R-4015F-S24|3
```

```
649-1012937890401BLF|1
517-30310-6002|5
```

The Switches you need 10 - take this reichelt.de-Link

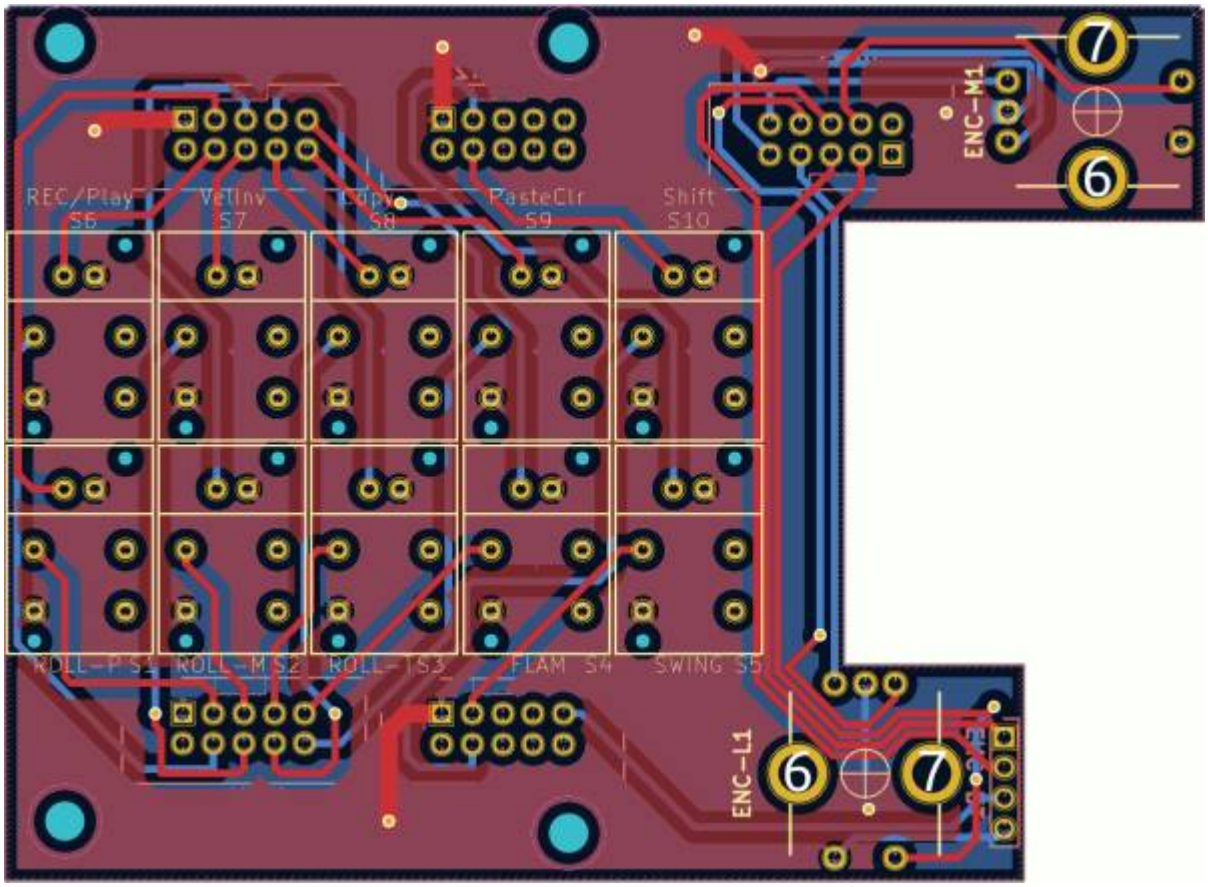

To Do

waiting for the Prototype

Community users working on it

- **Phatline** = PCB & Shematic, UI-Programming, Documentation...

Just let a Private message on the forum to user already involved.
or join the forum: Triggermatrix 5

From:
https://wiki.midibox.org/ - **MIDIbox**

Permanent link:
https://wiki.midibox.org/doku.php?id=tm5-codeblock&rev=1672252261

Last update: **2022/12/28 18:31**