TM5 Codeblock

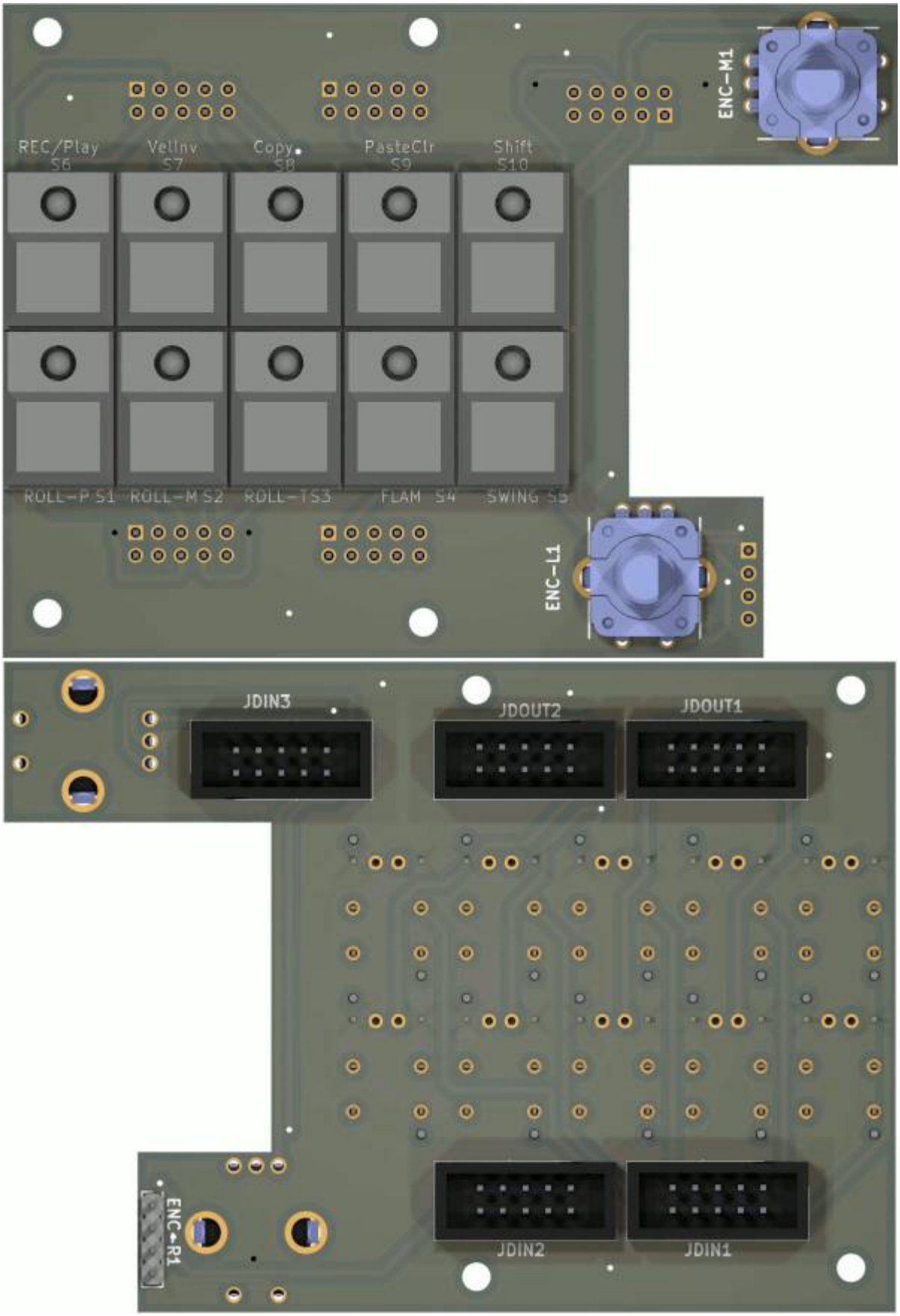

this is one essential part for my triggermatrix5

it handles the Menue and the Buttons...

Shematic

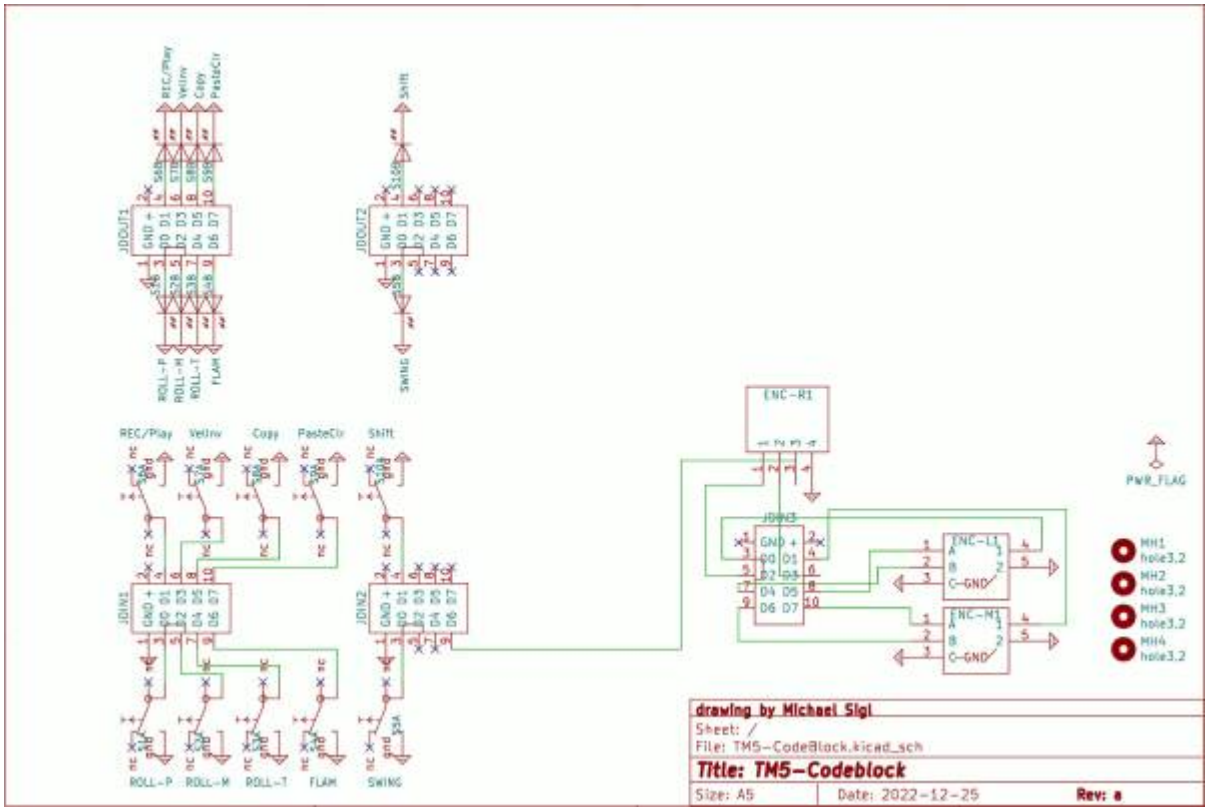

Building and BOM

100 THT, and handsolder
This PCB is needet 1x for triggermatrix5

BOM

qty	reference	value	mouser
3	ENC	PEC11R-4015F-S0024	652-PEC11R-4015F-S24
1	ENC-R1	Pin-Head-1×4-Male	649-1012937890401BLF
5	JDIN1, JDIN2, JDIN3, JDOUT1, JDOUT2	Pin-Header-Shroudet-2×5-THT-DIN	517-30310-6002
10	S1-S10	reichelt.de	DTL 2 SW Reichelt!

Order-List

copy following list into this mouser.com-Link

```
652-PEC11R-4015F-S24|3
649-1012937890401BLF|1
517-30310-6002|5
```

Order from Reichelt:
10x Button

Order from Midiphy:
1x Knob SetDK16-190V3 knob

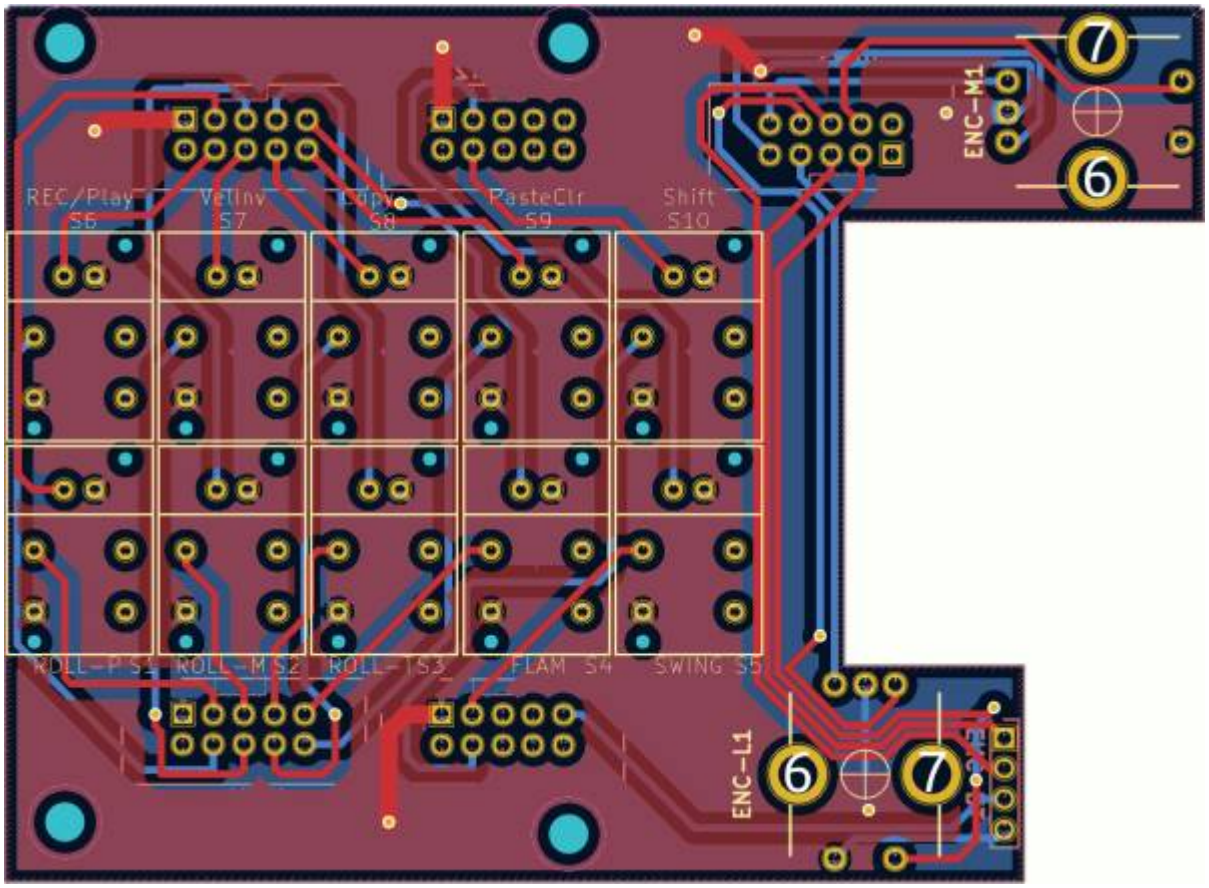

To Do

waiting for the Prototype

Community users working on it

- **Phatline** = PCB & Shematic, UI-Programming, Documentation...

Just let a Private message on the forum to user already involved.
or join the forum: Triggermatrix 5

From:
https://wiki.midibox.org/ - **MIDIbox**

Permanent link:
https://wiki.midibox.org/doku.php?id=tm5-codeblock&rev=1672257330

Last update: **2022/12/28 19:55**