# TM5 Codeblock

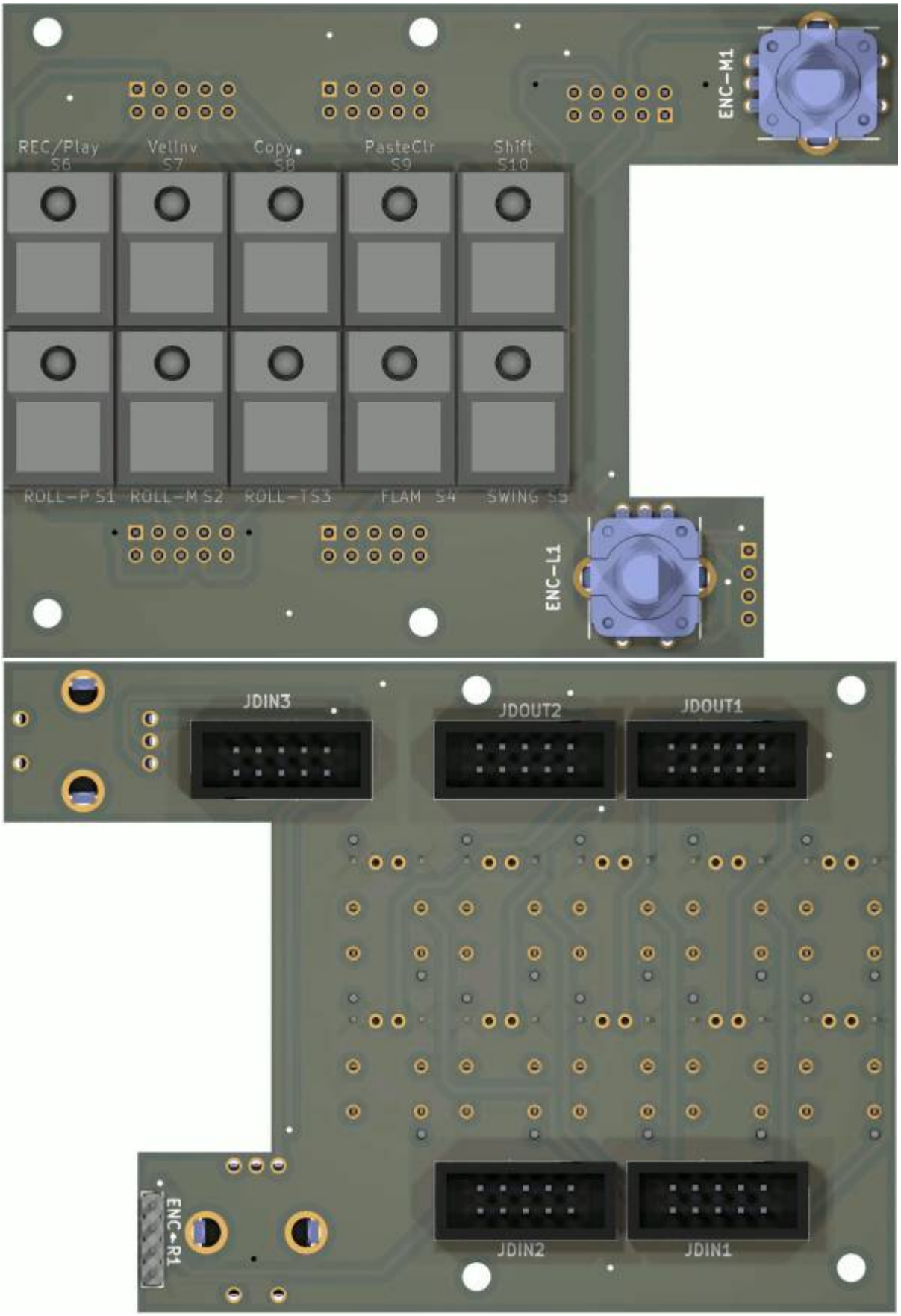


this is one essential part for my triggermatrix5

it handles the Menue and the Buttons...

# Shematic

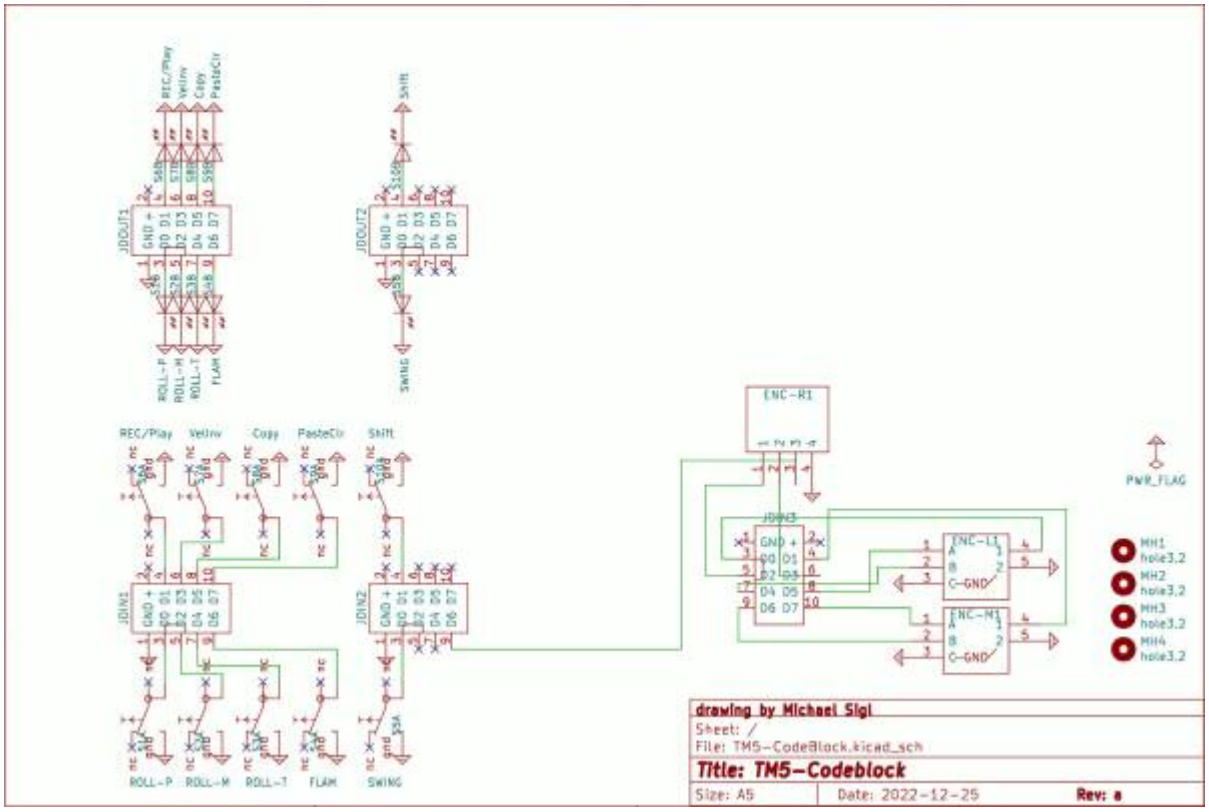


# Building and BOM

100 THT, and handsolder
This PCB is needet 1x for triggermatrix5

## BOM

| qty | reference | value | mouser |
|---|---|---|---|
| 3 | ENC | PEC11R-4015F-S0024 | 652-PEC11R-4015F-S24 |
| 1 | ENC-R1 | Pin-Head-1×4-Male | 649-1012937890401BLF |
| 5 | JDIN1, JDIN2, JDIN3, JDOUT1, JDOUT2 | Pin-Header-Shroudet-2×5-THT-DIN | 517-30310-6002 |

## Order-List

copy following list into this mouser.com-Link

```
652-PEC11R-4015F-S24|3
649-1012937890401BLF|1
517-30310-6002|5
517-89110-0101|10
```

**Order from Reichelt:**
10x Button

**Order from Midiphy:**
1x Knob SetDK16-190V3 knob

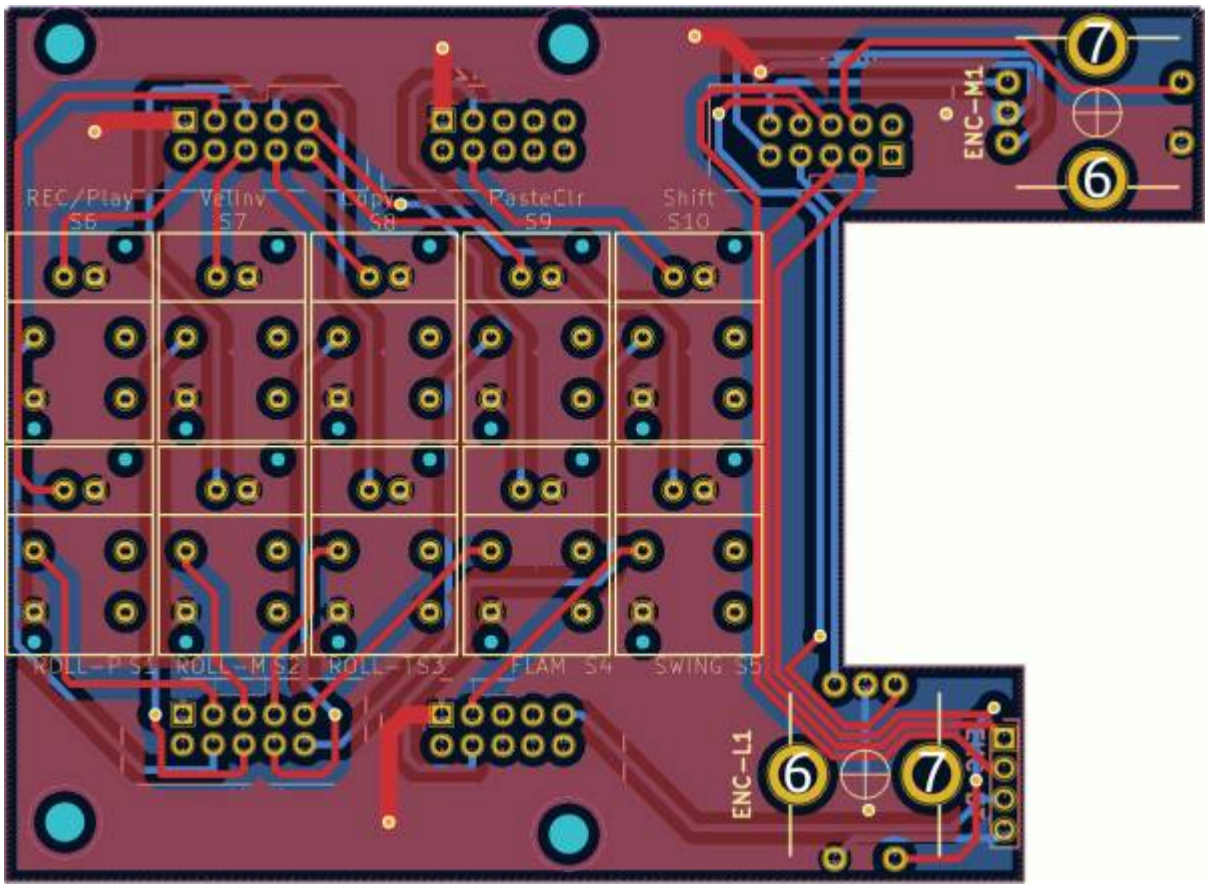


# To Do

waiting for the Prototype

# Community users working on it

- **Phatline** = PCB & Shematic, UI-Programming, Documentation...

Just let a Private message on the forum to user already involved.

or join the forum: Triggermatrix 5

From:
https://wiki.midibox.org/ - **MIDIbox**

Permanent link:
**https://wiki.midibox.org/doku.php?id=tm5-codeblock&rev=1672261342**

Last update: **2022/12/28 21:02**