TM5-DinDoutGates

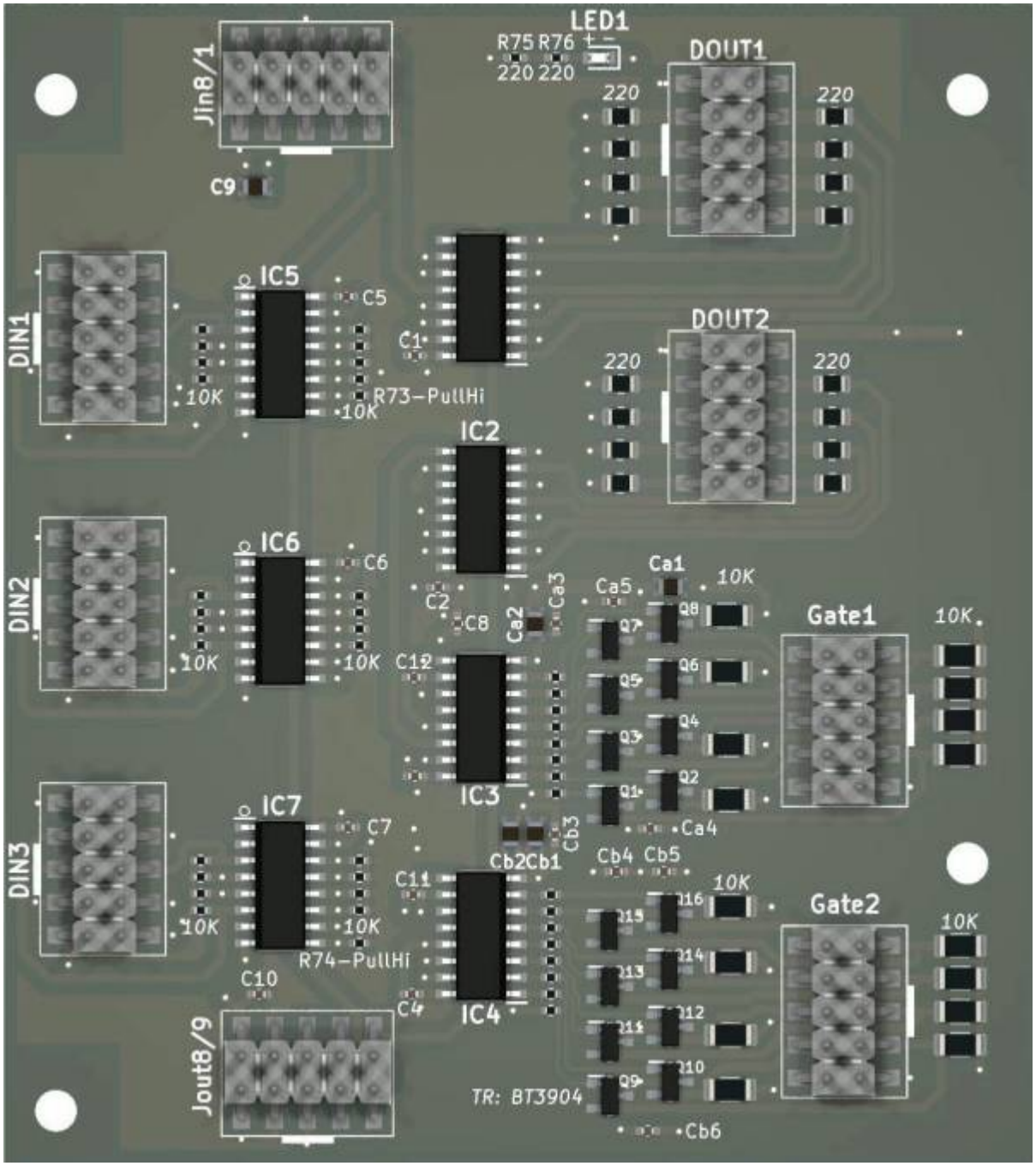

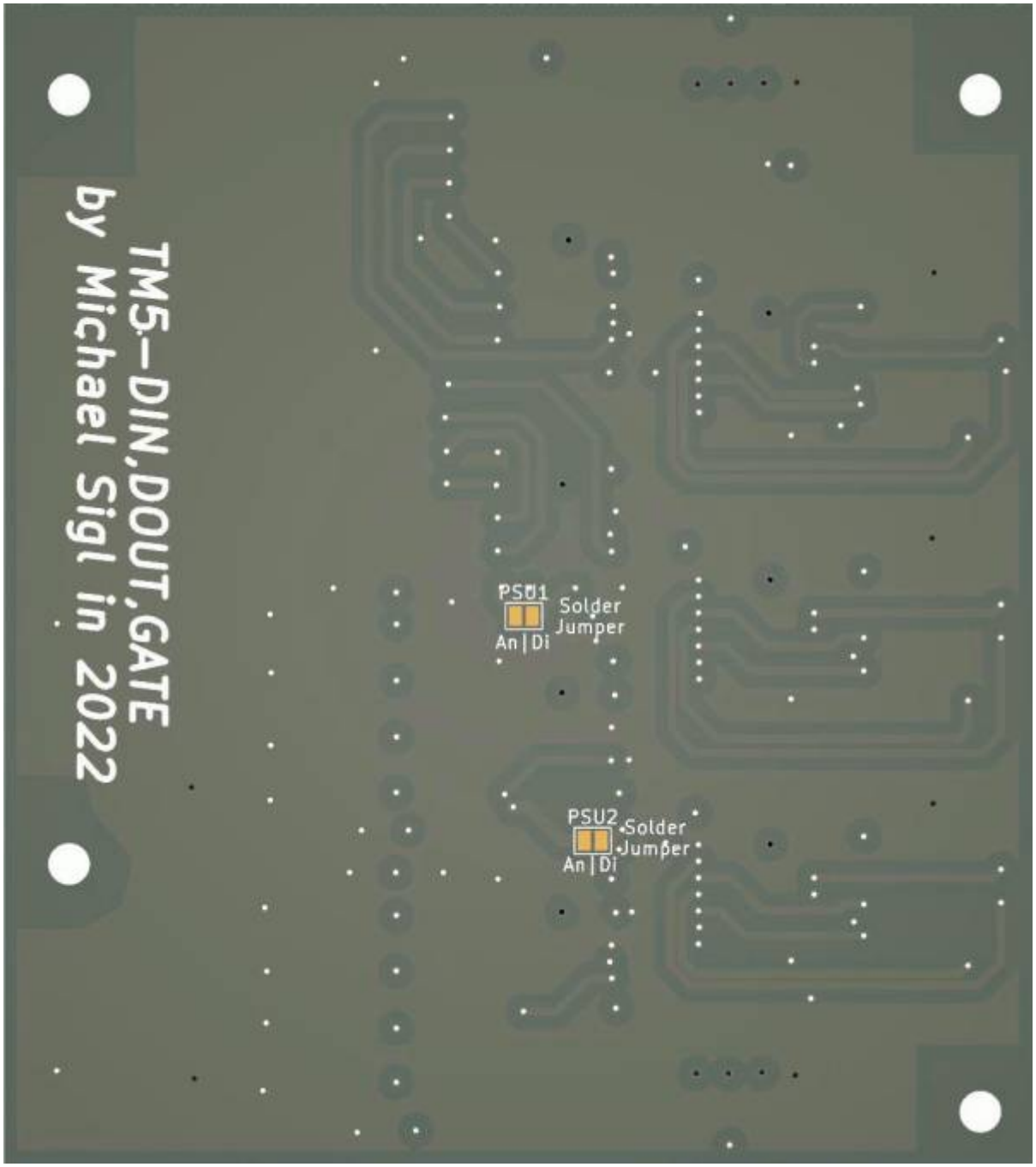

this is one essential part for my triggermatrix5
it gives 24 Digital Inputs, and 32 Digital Outputs, while 16 Outputs are used for UI, the othere 16 are buffered, and are for use as 16 GAte/Triggger output at 5V Level
i created this board. its fully SMD, and made it pick and place ready - so no soldering required!

Shematic

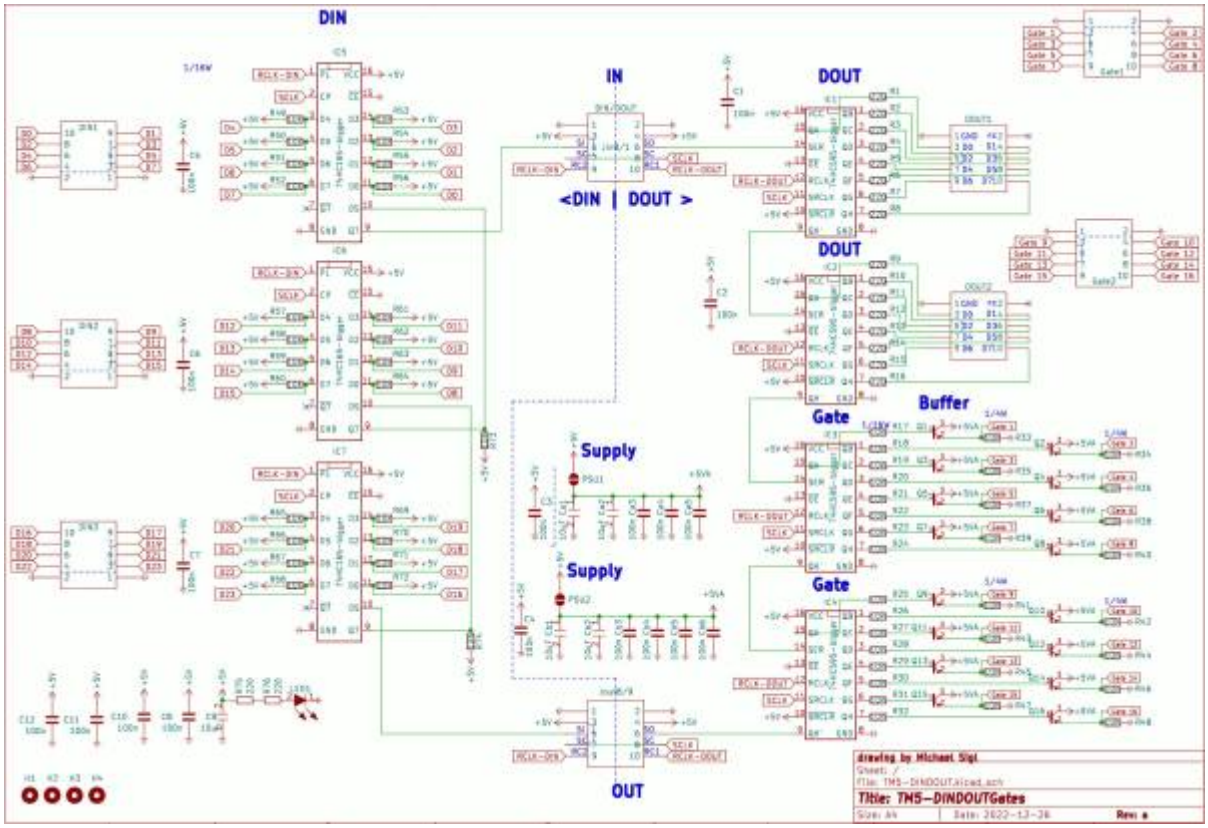

Building and BOM

Its build by pick and place robots... so no need to build

BOM

qty	reference	value	footprint	jlc
18	C1 – C12, Ca3, Ca4, Ca5, Cb3, Cb4, Cb5, Cb6	100n	C_0402	C307331
5	C9, Ca1, Ca2, Cb1, Cb2	10uF	C0805	C440198
5	DIN1, DIN2, DIN3, Gate1, Gate2, Gates	Pin-Head-10-SMD C124391		
4	DOUT1, DOUT2, Jin8/1, Jout8/9 DIN/DOUT	Pin-Head-10-SMD C124391		
4	IC1, IC2, IC3, IC4	74HC595-bigger	HC595-smd	C5947
3	IC5, IC6, IC7	74HC165-bigger	HC165-smd	C5613
1	LED1	LED LED-0603	C2286	
16	Q1 – Q16	MMBT3904-7-F MMBT3904-7-F	C20526	
16	R1 – R16	220 R_0805	C25294	
42	R17 – R74	10K R_0402	C25744	
16	R33 – R48	10K R_1206	C17902	
2	R75, R76	220 R_0402	C25091	

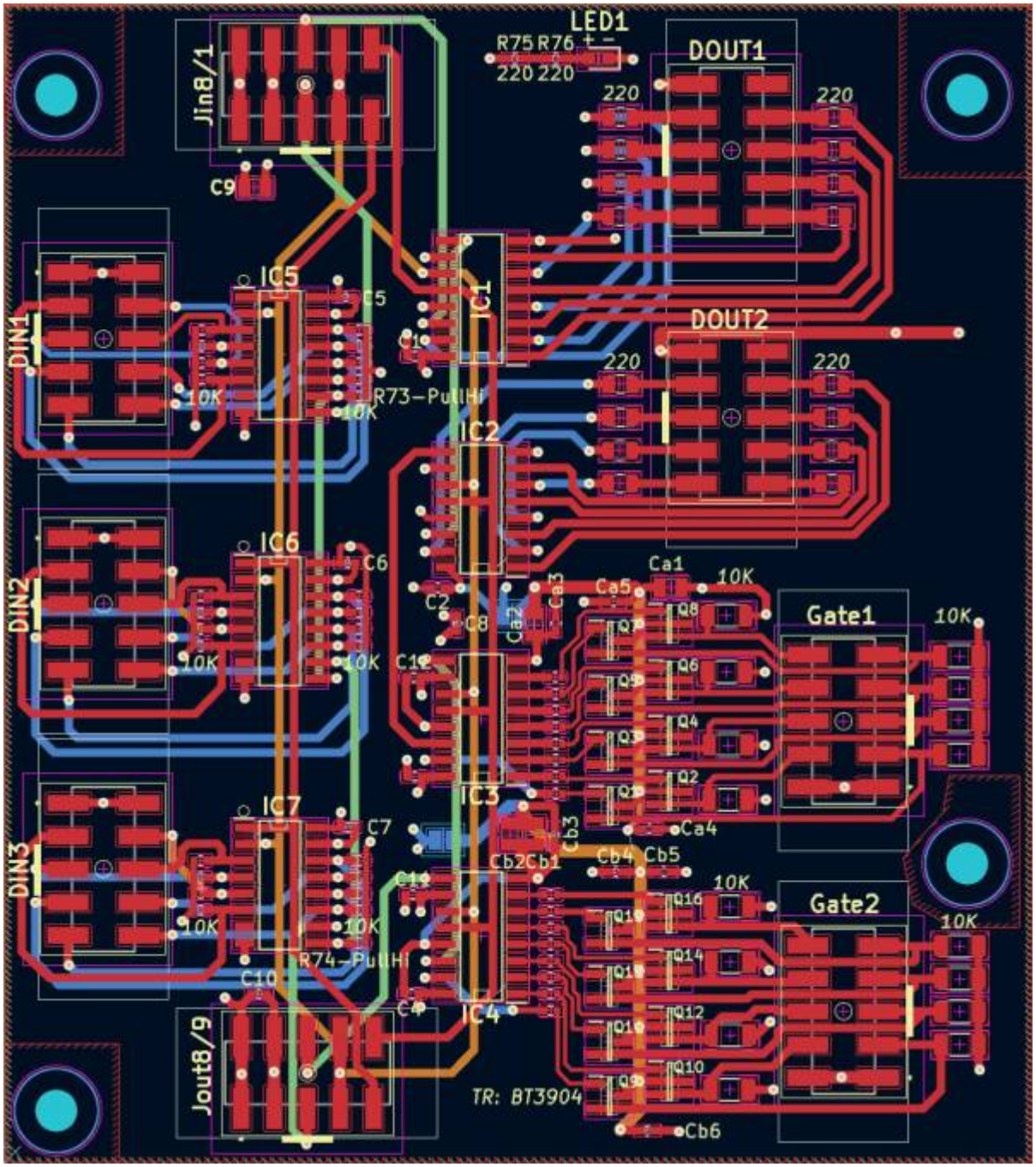

To Do

waiting for the assembled Prototype

Community users working on it

- **Phatline** = PCB & Shematic, UI-Programming, Documentation…

Just let a Private message on the forum to user already involved.
or join the forum: Triggermatrix 5

From:
https://wiki.midibox.org/ - **MIDIbox**

Permanent link:
https://wiki.midibox.org/doku.php?id=tm5-dindoutgate&rev=1672064315

Last update: **2022/12/26 14:18**