TM5-DinDoutGates

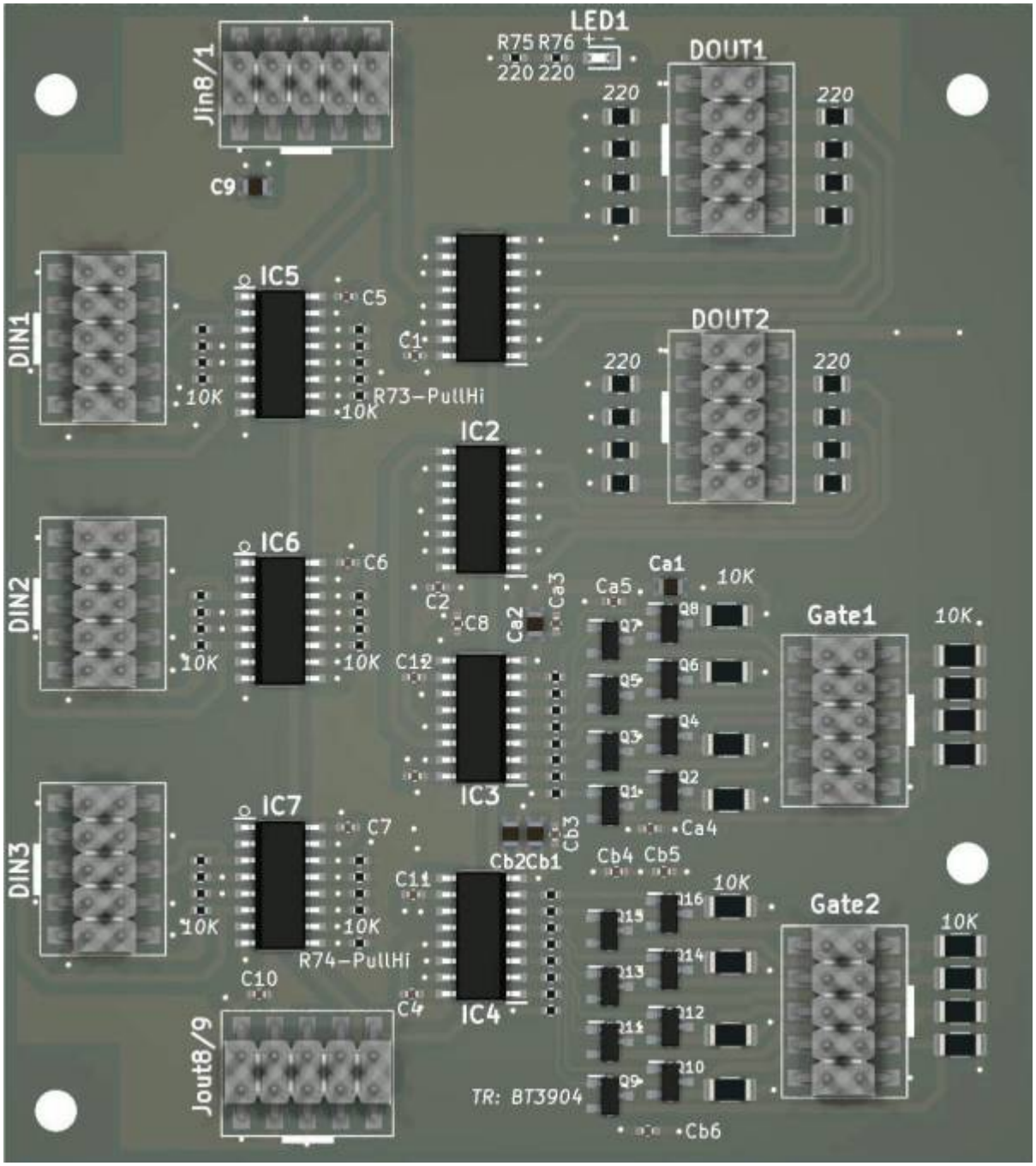

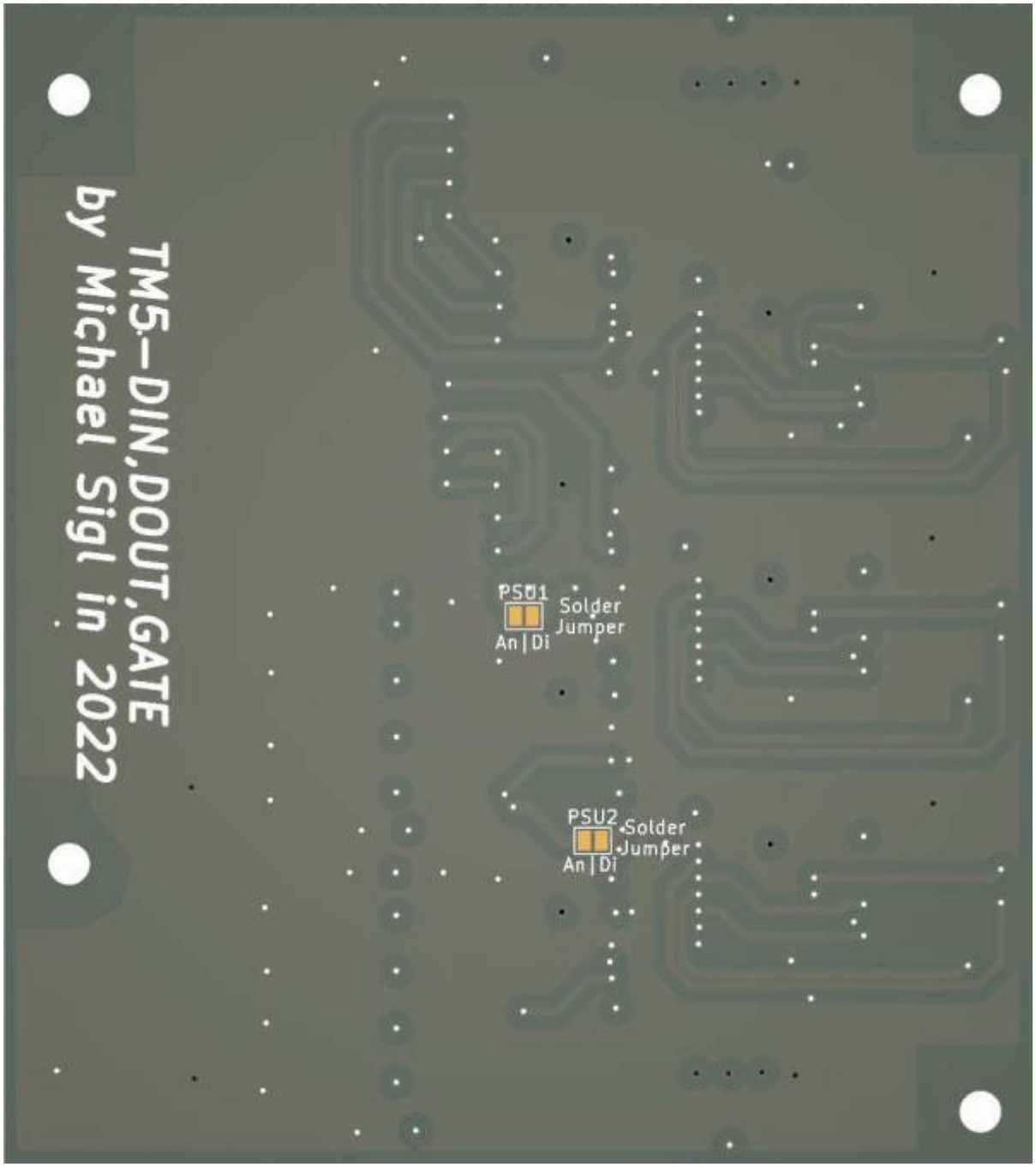

this is one essential part for triggermatrix5

it gives;
24 Digital Inputs
32 Digital Outputs
* while 16 Outputs are used for UI
* the other 16 are buffered, and are for use as 16 GAte/Triggger output at 5V Level

The Board is fully SMD, and made for pick and place - so no soldering required!

Shematic

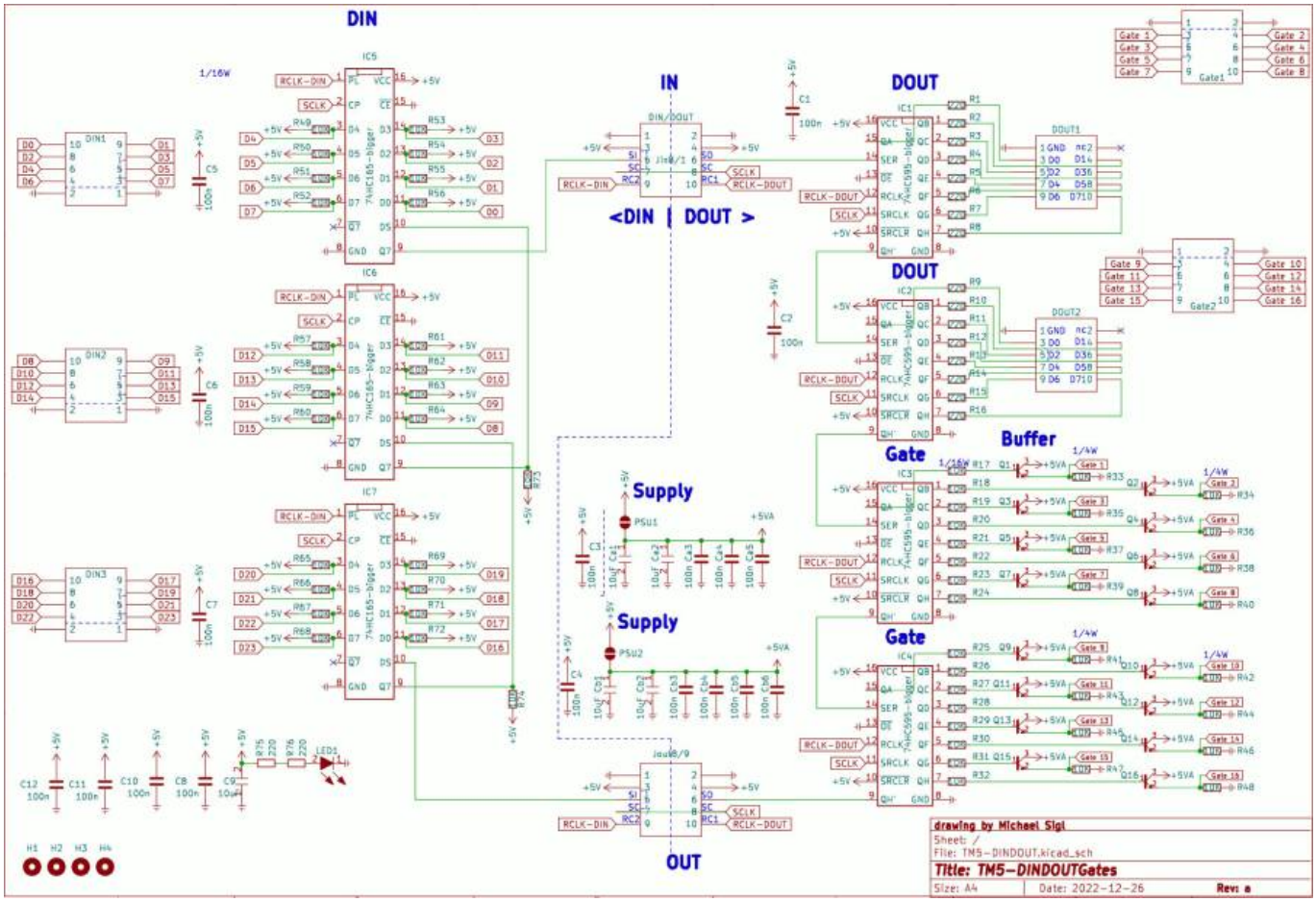

Building and BOM

Its build by pick and place robots... so no need to build, or order any component

BOM

qty	reference	value	footprint	jlc
18	C1 – C12, Ca3, Ca4, Ca5, Cb3, Cb4, Cb5, Cb6	100n	C_0402	C307331
5	C9, Ca1, Ca2, Cb1, Cb2	10uF	C0805	C440198
5	DIN1, DIN2, DIN3, Gate1, Gate2	Gates	Pin-Head-10-SMD	C124391
4	DOUT1, DOUT2, Jin8/1, Jout8/9	DIN/DOUT	Pin-Head-10-SMD	C124391
4	IC1, IC2, IC3, IC4	74HC595-bigger	HC595-smd	C5947
3	IC5, IC6, IC7	74HC165-bigger	HC165-smd	C5613
1	LED1	LED	LED-0603	C2286
16	Q1 – Q16	MMBT3904-7-F	MMBT3904-7-F	C20526
16	R1 – R16	220	R_0805	C25294
42	R17 – R74	10K	R_0402	C25744
16	R33 – R48	10K	R_1206	C17902
2	R75, R76	220	R_0402	C25091

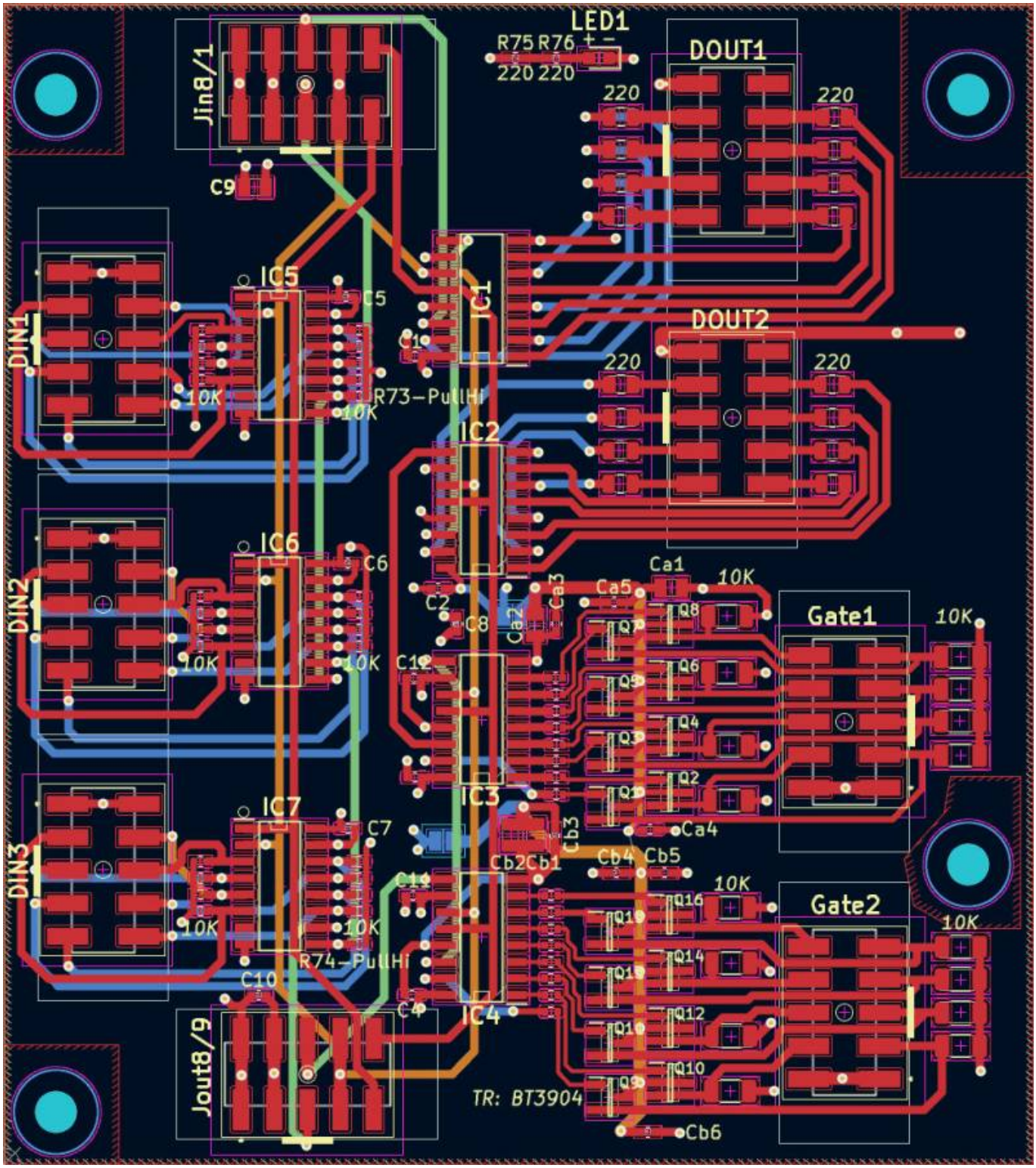

To Do

waiting for the assembled Prototype

Community users working on it

- **Phatline** = PCB & Shematic, UI-Programming, Documentation...

Just let a Private message on the forum to user already involved.
or join the forum: Triggermatrix 5

From:
https://wiki.midibox.org/ - **MIDIbox**

Permanent link:
https://wiki.midibox.org/doku.php?id=tm5-dindoutgate&rev=1672252758

Last update: **2022/12/28 18:39**