TM5-DinDoutGates

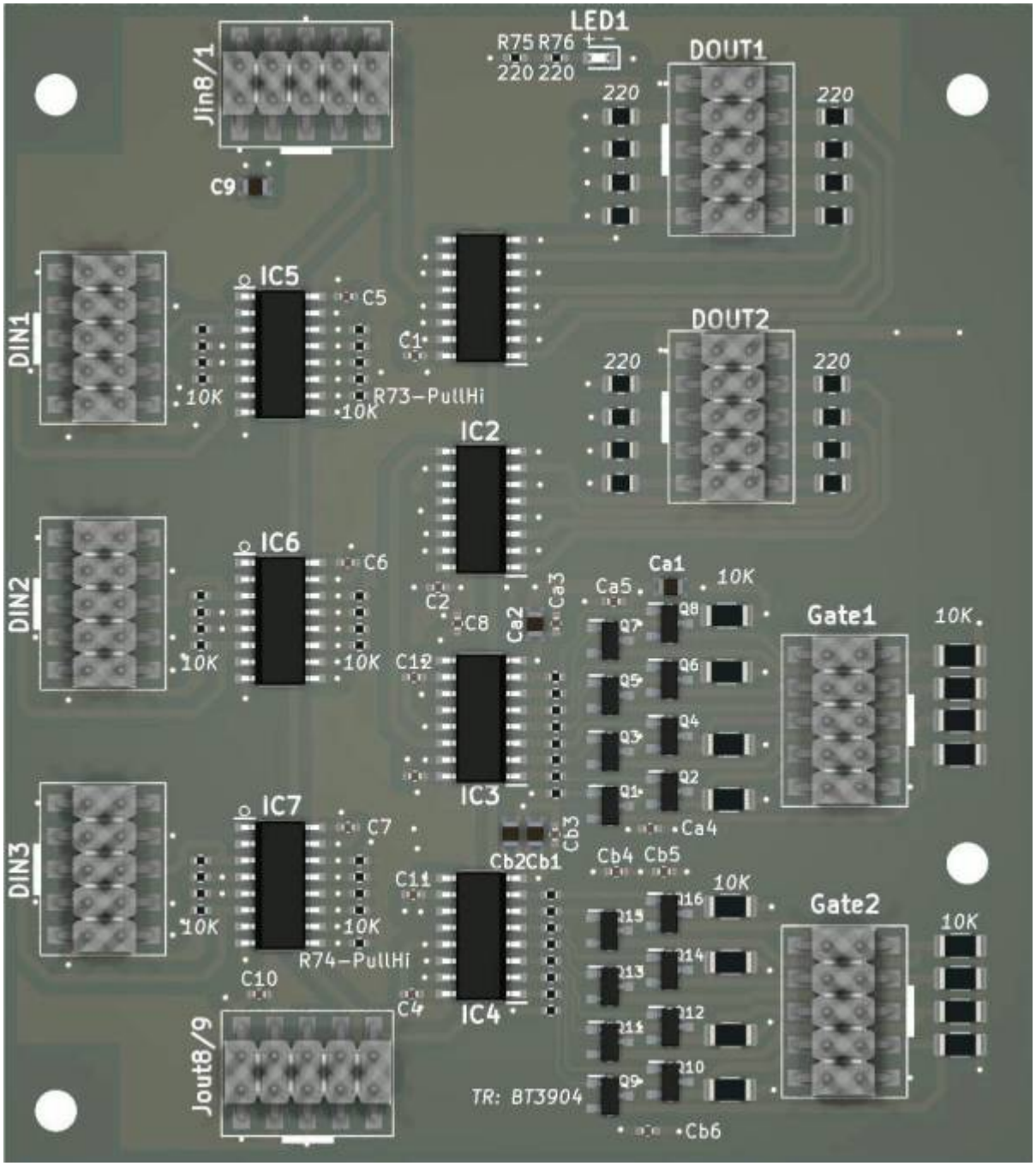

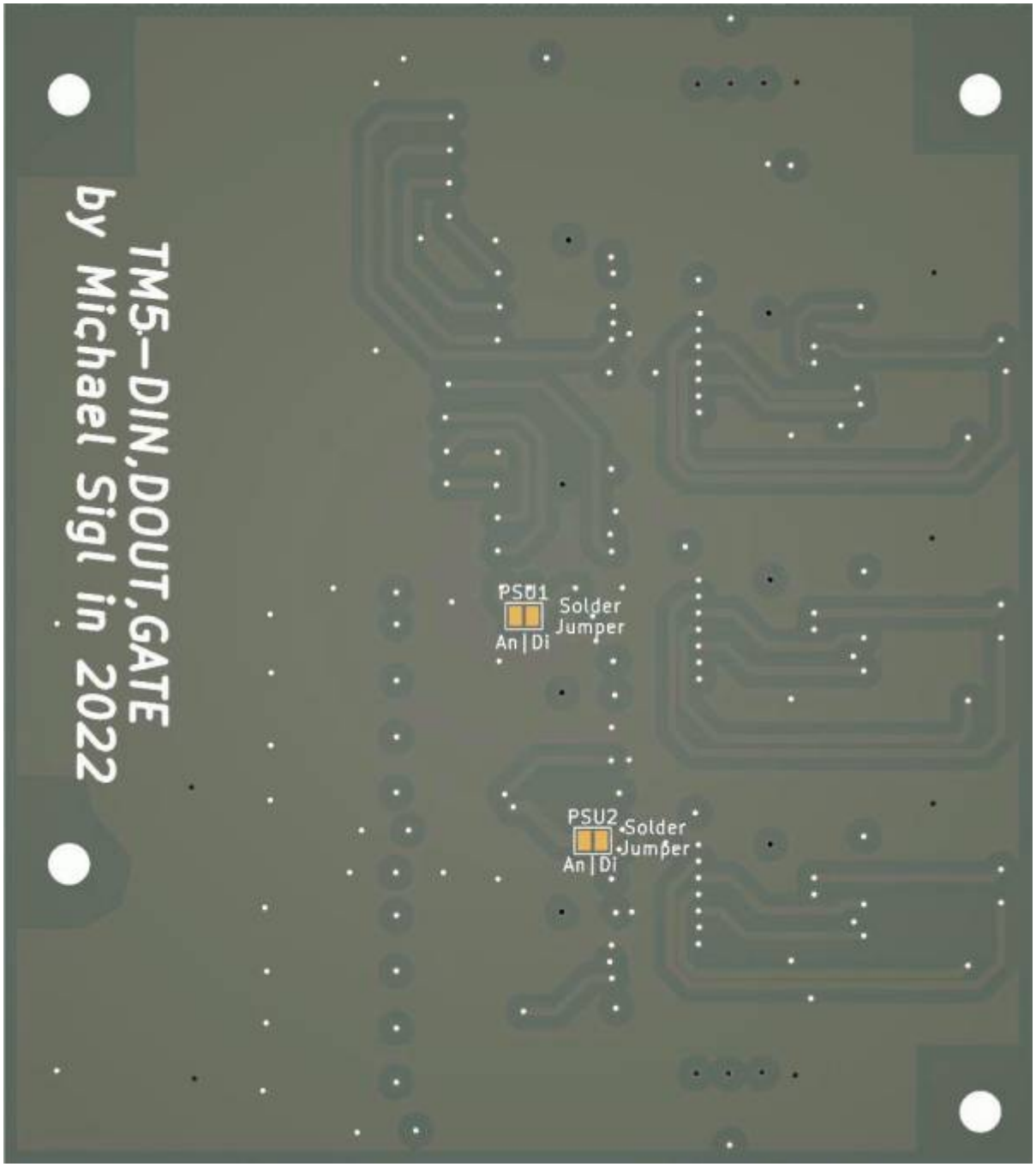

it gives;
24 Digital Inputs
32 Digital Outputs
* while 16 Outputs are used for UI
* the other 16 are buffered, and are for use as 16 GAte/Triggger output at 5V Level

The Board is fully SMD, and made for pick and place - so no soldering required!

Shematic

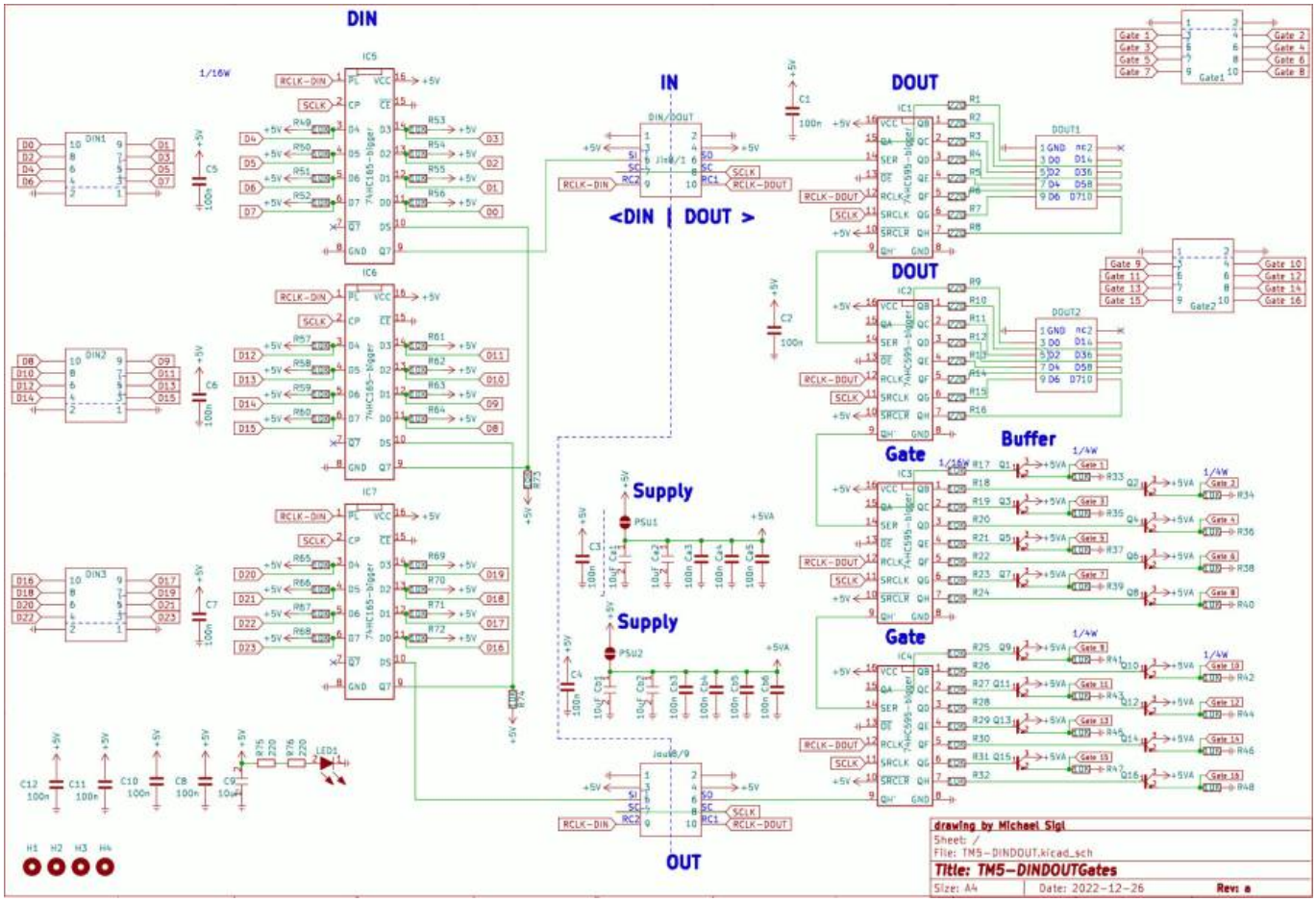

Building and BOM

Its build by pick and place robots... so no need to build, or order any component

BOM

Follwing list is for reference, and debugging only, no need to order them! all the parts are already soldered on the PCB!

qty	reference	value	footprint	jlc
18	C1 – C12, Ca3, Ca4, Ca5, Cb3, Cb4, Cb5, Cb6	100n	C_0402	C307331
5	C9, Ca1, Ca2, Cb1, Cb2	10uF	C0805	C440198
5	DIN1, DIN2, DIN3, Gate1, Gate2	Gates	Pin-Head-10-SMD	C124391
4	DOUT1, DOUT2, Jin8/1, Jout8/9	DIN/DOUT	Pin-Head-10-SMD	C124391
4	IC1, IC2, IC3, IC4	74HC595-bigger	HC595-smd	C5947
3	IC5, IC6, IC7	74HC165-bigger	HC165-smd	C5613
1	LED1	LED	LED-0603	C2286
16	Q1 – Q16	MMBT3904-7-F	MMBT3904-7-F	C20526
16	R1 – R16	220	R_0805	C25294
42	R17 – R74	10K	R_0402	C25744

qty	reference	value	footprint	jlc
16	R33 – R48	10K	R_1206	C17902
2	R75, R76	220	R_0402	C25091

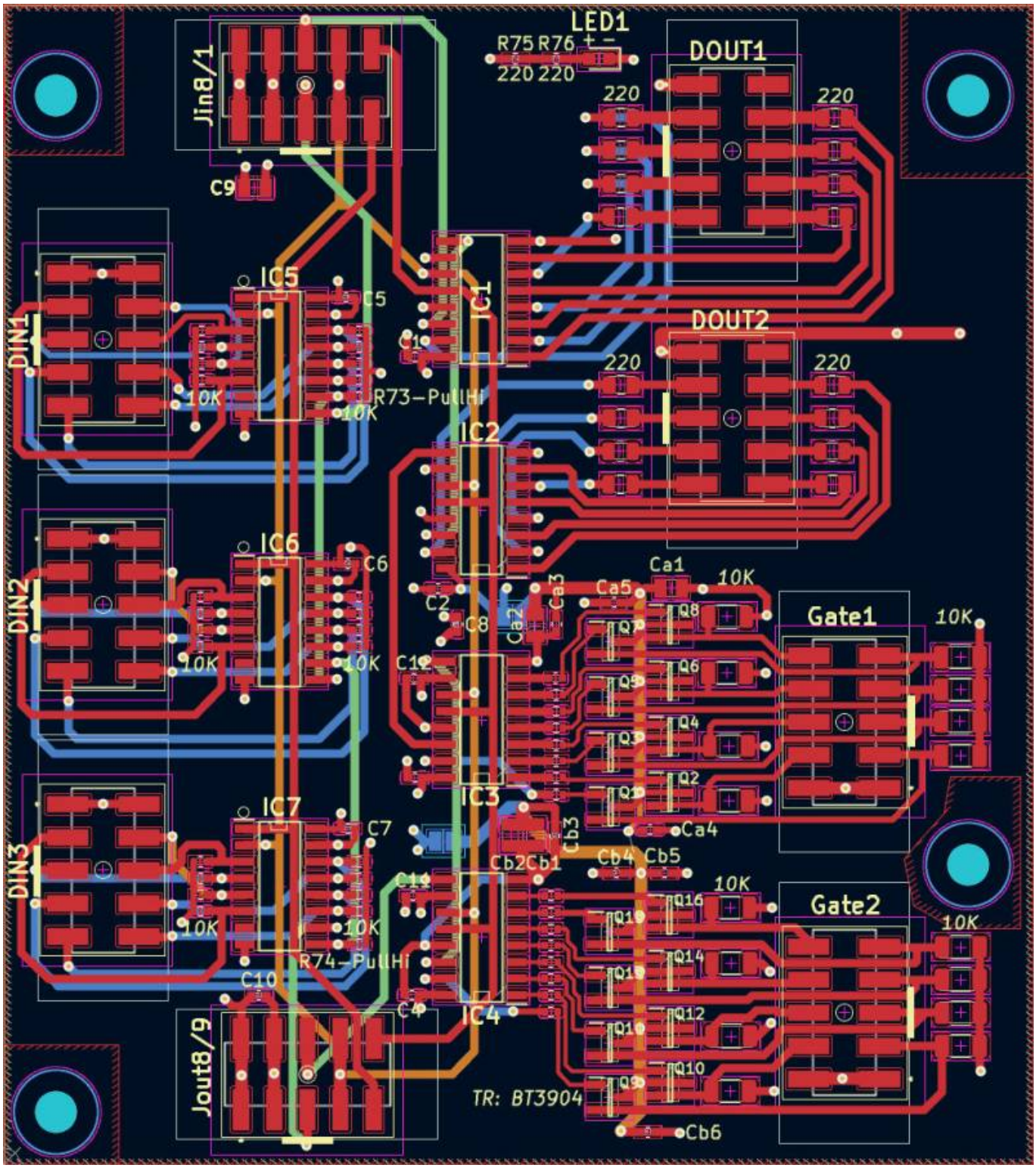

To Do

waiting for the assembled Prototype

Community users working on it

- **Phatline** = PCB & Shematic, UI-Programming, Documentation...

Just let a Private message on the forum to user already involved.
or join the forum: Triggermatrix 5

From:
https://wiki.midibox.org/ - **MIDIbox**

Permanent link:
https://wiki.midibox.org/doku.php?id=tm5-dindoutgate&rev=1672252879

Last update: **2022/12/28 18:41**