# TM5-DinDoutGates

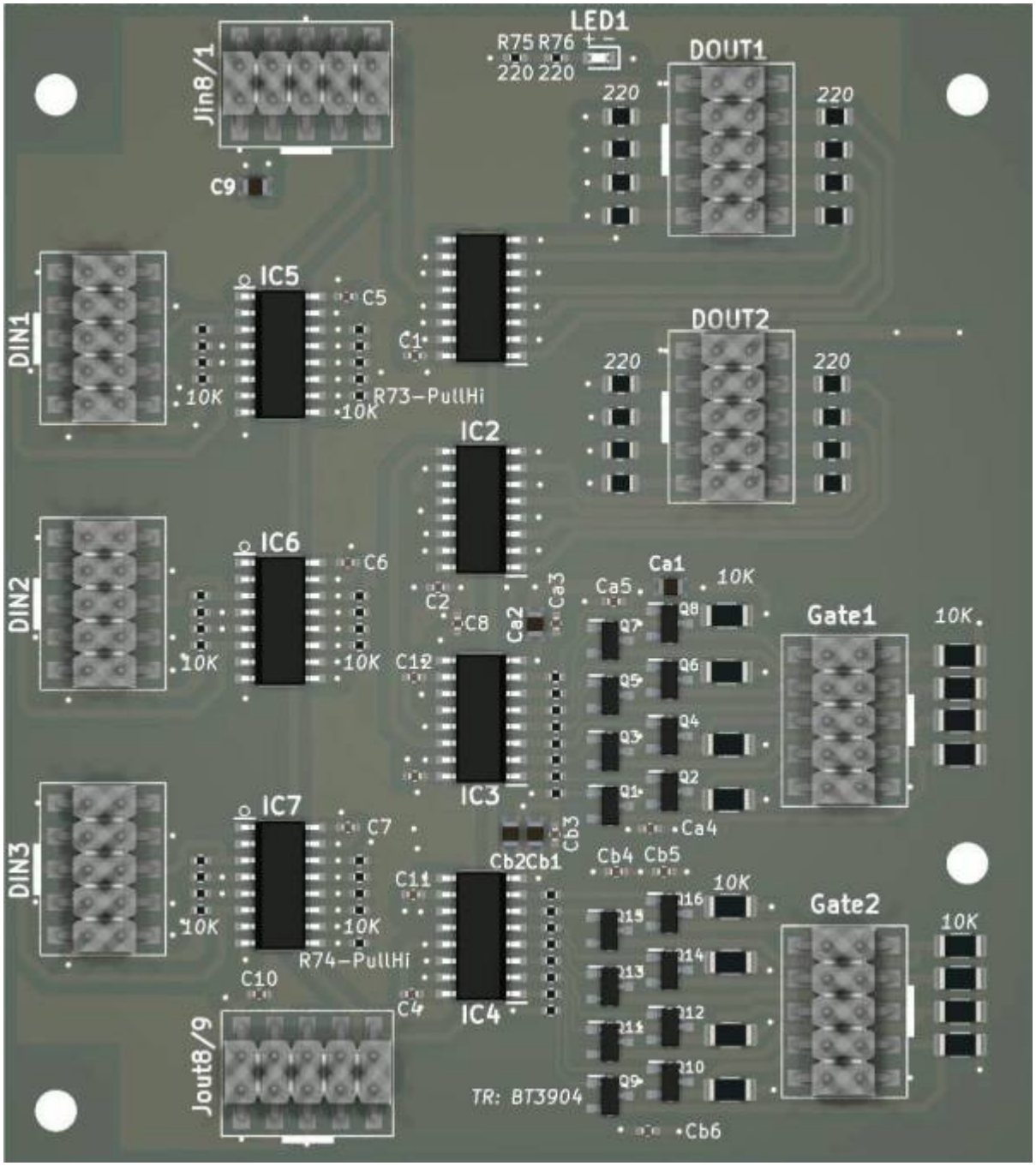

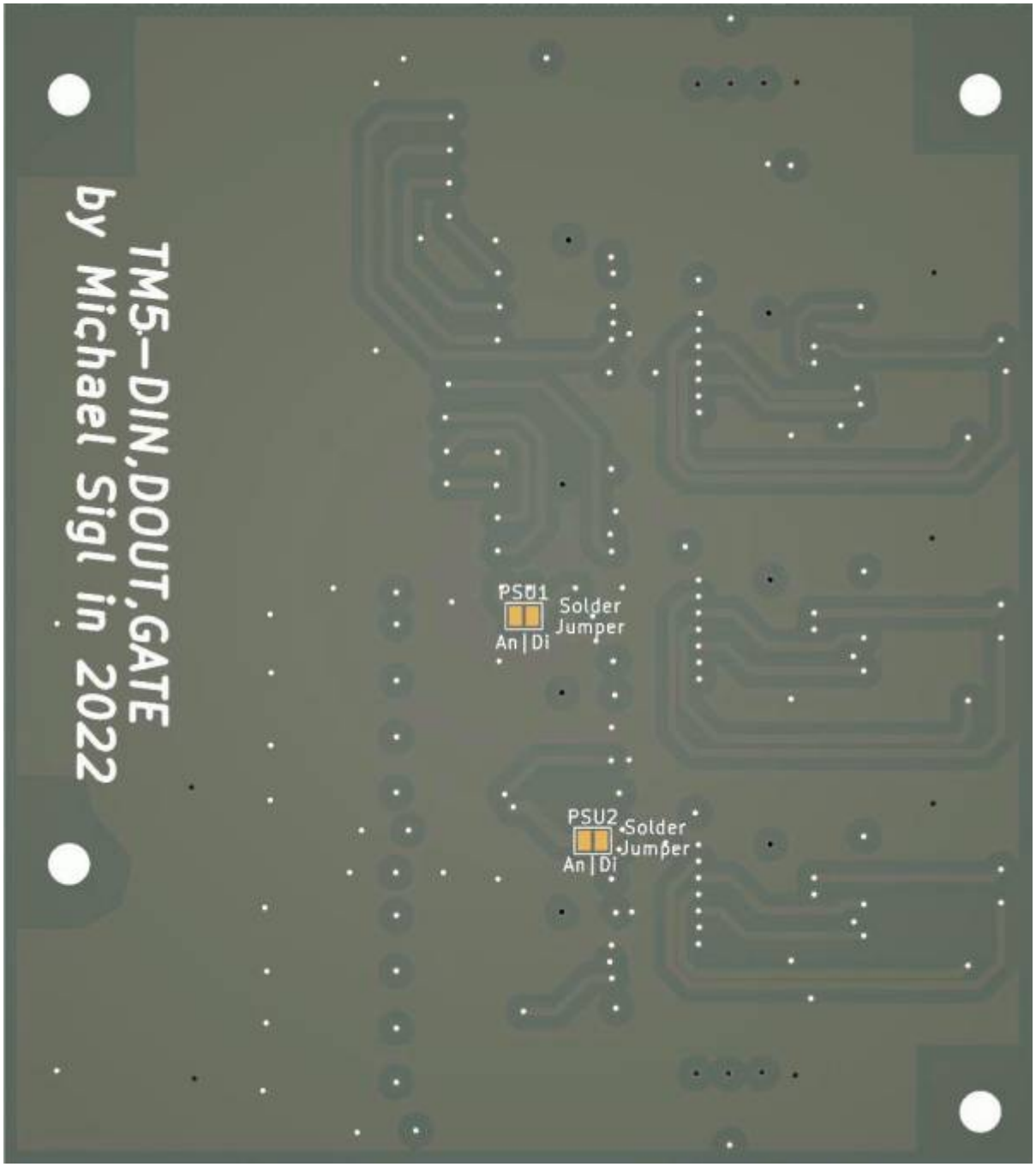


**it gives;**
24 Digital Inputs
32 Digital Outputs
* while 16 Outputs are used for UI
* the other 16 are buffered, and are for use as 16 GAte/Triggger output at 5V Level

The Board is fully SMD, and made for pick and place - so no soldering required!

# Shematic

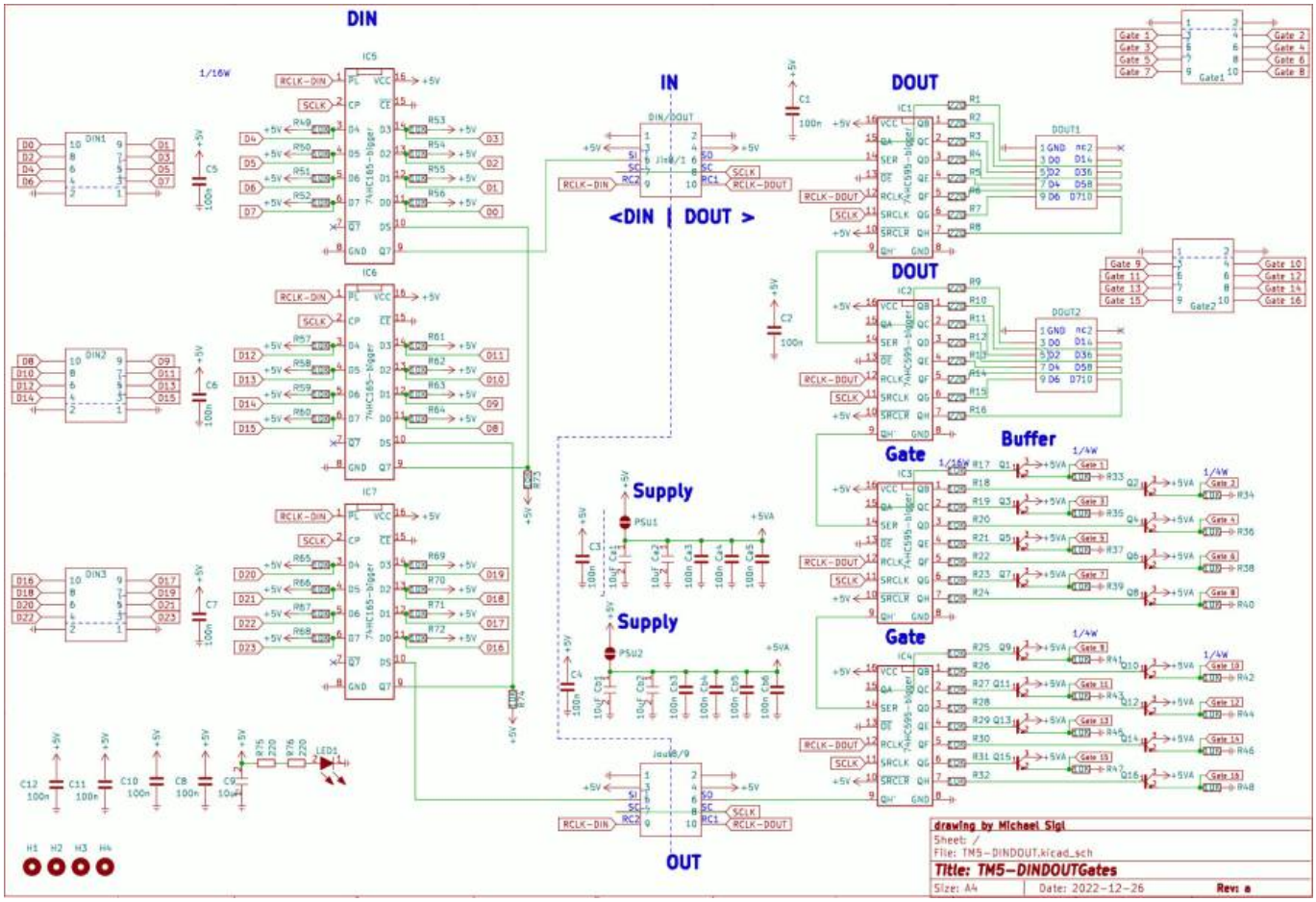


# Building and BOM

Its build by pick and place robots... so no need to build, or order any component
you need this PCB 1x for triggermatrix5

## BOM

Follwing list is for reference, and debugging only, no need to order them! all the parts are already soldered on the PCB!

| qty | reference | value | footprint | jlc |
|---|---|---|---|---|
| 18 | C1 – C12, Ca3, Ca4, Ca5, Cb3, Cb4, Cb5, Cb6 | 100n | C_0402 | C307331 |
| 5 | C9, Ca1, Ca2, Cb1, Cb2 | 10uF | C0805 | C440198 |
| 5 | DIN1, DIN2, DIN3, Gate1, Gate2 | Gates | Pin-Head-10-SMD | C124391 |
| 4 | DOUT1, DOUT2, Jin8/1, Jout8/9 | DIN/DOUT | Pin-Head-10-SMD | C124391 |
| 4 | IC1, IC2, IC3, IC4 | 74HC595-bigger | HC595-smd | C5947 |
| 3 | IC5, IC6, IC7 | 74HC165-bigger | HC165-smd | C5613 |
| 1 | LED1 | LED | LED-0603 | C2286 |
| 16 | Q1 – Q16 | MMBT3904-7-F | MMBT3904-7-F | C20526 |
| 16 | R1 – R16 | 220 | R_0805 | C25294 |

| qty | reference | value | footprint | jlc |
|---|---|---|---|---|
| 42 | R17 – R74 | 10K | R_0402 | C25744 |
| 16 | R33 – R48 | 10K | R_1206 | C17902 |
| 2 | R75, R76 | 220 | R_0402 | C25091 |

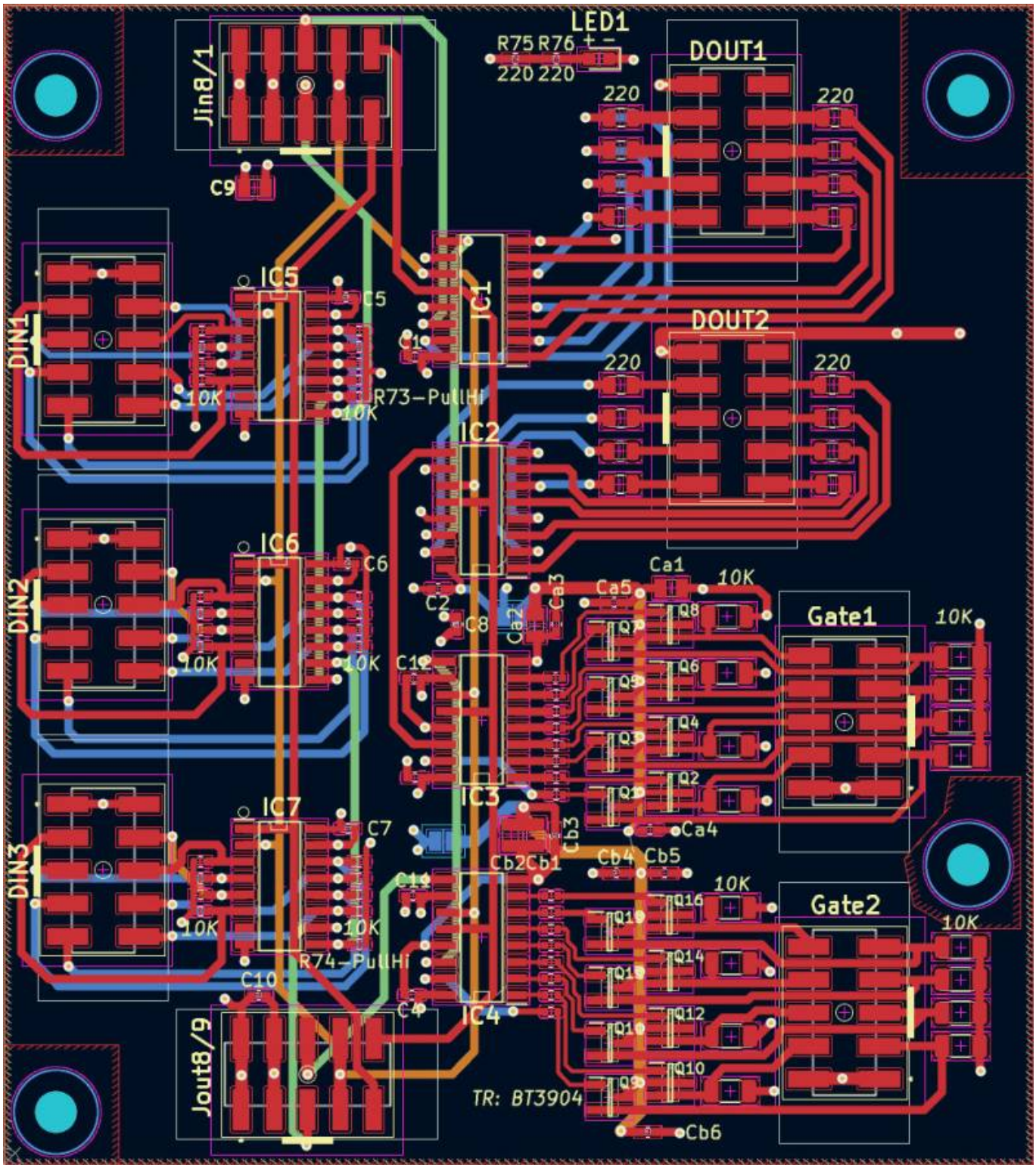

# To Do

waiting for the assembled Prototype

# Community users working on it

- **Phatline** = PCB & Shematic, UI-Programming, Documentation...

Just let a Private message on the forum to user already involved.
or join the forum: Triggermatrix 5

From:
https://wiki.midibox.org/ - **MIDIbox**

Permanent link:
**https://wiki.midibox.org/doku.php?id=tm5-dindoutgate&rev=1672252894**

Last update: **2022/12/28 18:41**