wCoreF4

Introduction

This is a cross-grade of the STM32F4 Core based on the Core407v breakout board from Waveshare. There are other versions of MCU breakouts, but the Waveshare one seems quite a reputable source with decent distribution and documentation.

Pros

- Slightly smaller footprint
- (Almost) all connectors on same face
- Proper USB A and B ports
- Footswitch/gate 3.5mm jack
- Hardware host/slave switch
- LEDs on the panel
- Reset button on the panel
- User button on header
- More mounting options available (e.g. panel mount including USB)
- 1A 3v3 regulator
- Possibility for external Vref (for AIN)

Cons

- Similar height to Disco version (could cut off headers etc.)
- Lacks ST-LINK and requires a (cheap) programmer or a Discovery module
- No mounting holes on MCU breakout
- Requires SMT soldering (wide pitch)

Sub parts

The Core is split over three PCBs:

- wCoreF4 PCB
- wCore USB
- wCore RES-SD

The MIDI interfaces were also redesigned:

- wCore MIDI8
- wCore I2C

Build instructions are found on the appropriate pages.

MCU module

The actual MCU module is available from several sources:

- https://eckstein-shop.de/Core407V
- http://www.waveshare.com/core407v.htm
- eBay

Burning the bootloader

The MCU module has a USB port, but direct programming would only be possible with a USB-UART programmer. It would also require a different bootloader protocol. Instead, we make use of ST-LINK-like functionality. The MCU module has a typical JTAG header and these pins are also available on the two 2*25 header rows. So even if the header had to be removed for space reasons, it should always be possible to re-flash the MCU.

Option 1: ST-LINK clone

These are readily available from eBay and other sellers for typically <$10. You only require one programmer to flash as many modules as needed.

Option 2: use a Discovery module

The Discovery module (even if connected to a MIDIbox Core) can be used for programming. To do so, remove the two jumpers labelled ST-LINK/DISCOVERY. This connects the SWD interface from the STM32F4 MCU on the Discovery board:



Flashing over SWD

The following five connections should be made with DuPont cables:

- 3v3

- 0V/ground
- DIO
- CLK
- RESET

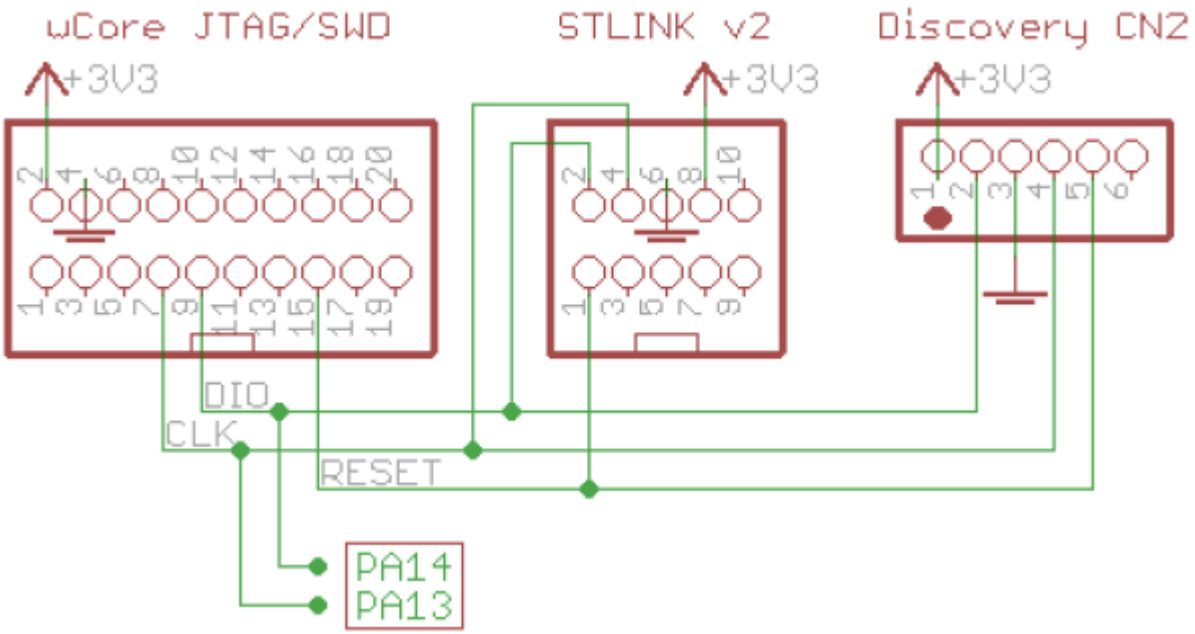

After that, follow the instructions for the initial flash of a Discovery module.

License

Currently the design is © 2017 antilog devices with all rights reserved; all documentation is CC BY-NC-SA 3.0.

From:
https://wiki.midibox.org/ - **MIDIbox**

Permanent link:
https://wiki.midibox.org/doku.php?id=wcore&rev=1505068381

Last update: **2017/09/10 18:33**